Installation, Operation and Owner's Manual

Summum 140 F
Summum 140 LC & RC
Summum 140 3S
Summum 140 4S
Summum 140 T
Summum 140 RD

Direct Vent Gas Fireplaces

⚠ DANGER

HOT GLASS WILL CAUSE BURNS.

DO NOT TOUCH GLASS UNTIL COOLED.

NEVER ALLOW CHILDREN TO TOUCH GLASS.

Une surface vitrée chaude peut causer des brûlures.

Laisser refroidir la surface vitrée avant d'y toucher.

Ne permettez jamais á un enfant de toucher la surface vitrée.

A barrier designed to reduce the risk of burns from the hot viewing glass is provided with this appliance and shall be installed for the protection of children and other at-risk individuals.

Une barrière conçu pour réduire le risque de brûlure par le verre de visualisation chaude est fournie avec cet appareil et doit être installé pour la protection des enfants et autres personnes à risque.

⚠ WARNING:
FIRE OR EXPLOSION HAZARD
Failure to follow safety warnings exactly could result in serious injury, death, or property damage.

- Do not store or use gasoline or other flammable vapors and liquids in the vicinity of this or any other appliance.
- WHAT TO DO IF YOU SMELL GAS
  - Do not try to light any appliance.
  - Do not touch any electrical switch; do not use any phone in your building.
  - Leave the building immediately.
  - Immediately call your gas supplier from a neighbor's phone. Follow the gas supplier's instructions.
  - If you cannot reach your gas supplier, call the fire department.
- Installation and service must be performed by a qualified installer, service agency or the gas supplier.

⚠ AVERTISSEMENT:
INCENDIE OU D'EXPLOSION
Le non-respect des avertissements de sécurité à la lettre pourrait entraîner de graves blessures , la mort ou des dommages matériels.

- Ne pas entreposer ni utilizer d'essence ni d'autres vapeurs ou liquides inflammables dans le voisinage de cet appareil ou de tout autre appareil.
- QUE FAIRE SI VOUS SENTEZ UNE ODEUR DE GAZ
  - Ne pas tenter d'allumer d'appareil.
  - Ne touchez á aucan interrupteur. Ne pas vous servir des téléphones se trouvant dans le bâtiment ou vous trouvez.
  - Quitter immédiatement le bâtiment.
  - Appelez immédiatment votre fournisseur de gaz depuis un voisin. Suivez les instructions du fournisseur.
  - Si vous ne pouvez rejoindre le fournisseur de gaz appelez le service des incindies.
- Installation et l'entretien doivent être effectués par un installateur qualifié, une agence de service ou le fournisseur de gaz.

INSTALLER: Leave this manual with the appliance.
CONSUMER: Retain this manual for future reference.

INSTALLATEUR: Laissez cette notice avec l'appareil.
CONSOMMATEUR: Conservez cette notice pour consultation ultérieure.

Accessory box contains:
- Remote control
- Restrictor plate
- 6V Power adapter (EU, US/CAN)
- Glass polish
- Gas coupling (optional)
- Wifibox + cable (optional)

Intertek
4006611

May 2026

CONTENTS

1 DECLARATION OF PERFORMANCE **5**
2 IMPORTANT INFORMATION **5**
2.1 Fuel type 5
2.2 Installation 5
2.3 Other information 6
2.4 Packaging materials 6
3 SAFETY INFORMATION AND WARNINGS **6**
4 THE CONTROLS **9**
4.1 Electronic ignition 9
5 ELECTRONICS **11**
5.1 Electrical requirements 11
5.2 (Replacement) parts 11
5.3 Remote control 12
5.4 Element4 ProControl App. 17
5.5 Connecting to a smart home system 18
6 GAS INSTALLATION **19**
6.1 General Installation Conditions 19
6.2 Gas Connection Requirements 19
6.3 Line Set Handling and Accessibility 19
6.4 Gas Line Inspection and Pressure Measurement 19
6.5 Installing the Gas Supply Line 19
6.6 Pressure Testing 20
7 GENERAL FIRE SAFETY **21**
7.1 General fire safety framework 21
7.2 Combustible and non-combustible materials 21
7.3 Heat transfer principles 21
7.4 Temperature limits 21
7.5 Key safety principles 21
8 INSTALLATION PREPARATION **22**
8.1 Location of installation 22
8.2 Framing prepation 23
8.3 Firestop installation and vent layout 23
8.4 Pre-construction test 24
8.5 Structural preparation 24
8.6 Air supply and exhaust design 24
8.7 Wiring and piping considerations 24
9 INSTALLATION AND ENCLOSURE **25**
9.1 General installation rules 25
9.2 Minimum volume above appliance 25
9.3 Convection openings 25
9.4 False ceiling 26
9.5 Fastener restriction zones 27
9.6 Combustible materials 28
9.7 Chimney construction of for Summum 140 4S 30
11 VENT TERMINATIONS **37**
11.1 Vertical Terminations - clearances and requirements 37
11.2 Horizontal terminations - clearances and requirements 38
12 MAINTENANCE INSTRUCTION **40**
12.1 Maintenance in the combustion chamber 40
12.2 Glass Maintenance 44
12.3 Burner Maintenance 45
13 INSTALLING THE FIRE MEDIA **46**
13.1 Log set for Summum 140 4S 47
14 TECHNICAL DATA **48**
14.1 Gas specifications 48
14.2 Electric Specification 48

15 OPERATING THE FIREPLACE **49**
15.1 Before the first fire 49
15.2 The first fire 49
15.3 The first fire - testing 49
A MASSACHUSETTS CERTIFICATION **50**
B TROUBLESHOOTING FLOWCHART **51**
C ERRORS CODES PROCONTROL APP **55**
C.1 Messages shown in app 55
C.2 Messages shown in remote 56
D DIMENSIONAL DRAWINGS **57**
E ELEMENT4 WARRANTY **63**

1 DECLARATION OF PERFORMANCE

We hereby declare that the design and construction of the Element4 gas appliances are complying to the essential demands and regulations for gas products.

Product:
- Direct vent gas fireplace, local spaceheater

Model:

E4-10
- Summum 140 F
- Summum 140 CL
- Summum 140 CR
- Summum 140 3S

E4-11
- Summum 140 T
- Summum 140 RD

E4-25
- Summum 140 4S

Applicable guidelines and norms:

- ANSI Z21.11.50a-2008
- CAN/CGA 2.17 - M91
- CSA2.22a-2008 “Vented Gas Fireplaces”

This declaration loses its validity when changes to the device are made without the written permission of Element4. You can ask for a copy of the test certificates of all models via our general e-mail address, which is found on the back of this manual.

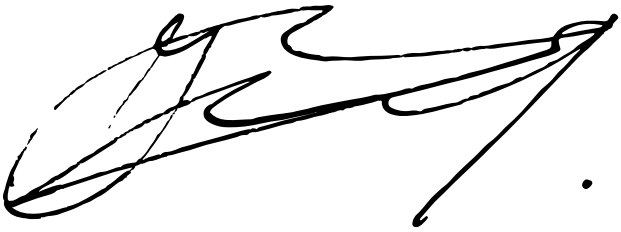

J. Kempers
CEO

2 IMPORTANT INFORMATION

Installer
Leave the following for the customer and explain when necessary
- User manual
- Installation manual
- Instruction card decoration media
- Suction cups
- Remote control

Owner
Keep this manual for future reference

The fireplace may only be installed by a qualified installer/dealer, following these installation instructions. We advise you to read these instructions properly, before commencing the installation of your device. Make yourself fully aware of all the following instructions and the many features of your Element4 direct vent gas fireplace appliance.

Before installation check the device for transport damage and inform your supplier immediatly if damage is found.

This appliance is a vented gas fireplace. It must not be used for any other purposes such as drying clothes, etc.

2.1 Fuel type

This device is designed to be used with natural gas or LPG. The device can only be used with the type of gas specified on the data plate at the time of purchase. This unit is not for use with solid fuels.
The gas type and pressure should check out with those locally available. The data plate is mounted to the device. Make sure it is accessible at all times. See **CHAPTER 13** for more elaborate specifications on your fireplace.

2.2 Installation

This direct vent system appliance must be installed as an OEM installation in manufactured homes (USA only) or an aftermarket permanently located, or a mobile home, where not prohibited by local codes and must be installed in accordance with Manufacturer’s instructions and the Manufactured Home Construction and Safety Standard, Title 24 CFR, Part 3280, in the United States, or the Standard for Installation in Mobile Homes, CAN/CSA Z240 MH Series, in Canada.

These direct vent appliances must be electrically grounded in accordance with the local codes or, in the absence of local codes, with National Electric code, ANSI/NFPA 70, or the Canadian Electric Code, CSA C22.1. More in the electronics and gas parts of the fireplace in **CHAPTER 4** and **CHAPTER 15** of this manual.

If the appliance is installed at an elevation above 2000 ft in the United States or 4500 ft in Canada, combustion characteristics may be affected due to reduced air density, which can impact burner performance and emissions; in such cases, consult

the local authority having jurisdiction (AHJ) and follow applicable codes and manufacturer guidelines for high-altitude installations, as adjustments such as derating the input or modifying burner orifices may be required.

2.3 Other information

The heat that is coming from the device may effect the materials in its surroundings. Always install the fire taking into account to correct the safety distances. For more information see **CHAPTER 7.2.**

The device may never be used without the glass or when glass is broken. The flue gases can get into the fireplace chase. The settings and construction of the device must not be changed! For maintenance and further handling of the fire see **CHAPTER 11.2** and **CHAPTER 11.3**
The device is provided with a special set of decorative media. Do not place any extra imitation logs or decoration media on the burner or in the combustion chamber. See **CHAPTER 12** for an instruction on how to arrange the decoration media properly.

2.4 Packaging materials

The packaging of the device is recyclable.
The following packaging materials may have been used:

- Cardboard
- CFC-free foam (soft)
- Wood
- Plastic
- Paper

These materials must be disposed of in a responsible manner and in accordance with government regulations.

Batteries are regarded as chemical waste. The batteries must be disposed of in a responsible manner and in accordance with government regulations. Remove the batteries first before discarding the remote control.

The government can also provide information about the responsible disposal of discarded appliances.

3 SAFETY INFORMATION AND WARNINGS

If the information in these instructions is not followed exactly a fire or explosion may result causing property damage, personal injury or death.

Note: This device may not be used a primary heat source!

Do not use this appliance as a temporary source of heat during construction.

3.4.1 Replacement or spare parts

Parts are only to be changed with original parts by the original manufacturer.

Dimensions will appear as Inches / metric throughout this manual. For convenience, the inches are rounded to the nearest 1/16” when converted. If greater accuracy is required, use the metric dimensions.

3.4.2 Children and pets

Radiant heat can heat surfaces such as the surround and trims of the fireplace to temperatures that, although approved safe, can be quite uncomfortable to touch - particularly for children and pets.
Children and pets should always be supervised when in the room where the appliance is located. Remote control handset should be kept out of reach of children.

In the presence of children, we strongly recommend that you install in front of the fireplace: a fire screen or, to protect young toddlers, a “hearth gate”.

Children and adults should be alerted to the hazards of high surface temperature and should stay away to avoid burns or clothing ignition.

3.4.3 Flammable materials and liquids

Do not store or use gasoline or other flammable vapors and liquids in the vicinity of this appliance.
Do not use this appliance if any part has been under water. Immediately call a qualified service technician to inspect the unit and to replace any part of the control system and any gas control that has been under water.

3.4.4 What do you do if you smell gas?

- Do not try to light any appliance.
- Do not touch any electrical switch; do not use any phone in your building.
- Leave the building immediately.
- Immediately call your gas supplier from a neighbor’s phone. Follow the gas supplier’s instructions.
- If you cannot reach your gas supplier, call the fire department.

WARNING

Children and adults should be alerted to the hazards of high surface temperature and should stay away to avoid burns or clothing ignition.

WARNING

This direct vent system appliance must be installed as an OEM installation in manufactured homes (USA only) or an aftermarket permanently located, or a mobile home, **where not prohibited by local codes** and must be installed in accordance with Manufacturer's instructions and the Manufactured Home Construction and Safety Standard, Title 24 CFR, Part 3280, in the United States, or the Standard for Installation in Mobile Homes, CAN/CSA Z240 MH Series, in Canada.

If the information in these instructions is not followed exactly a fire or explosion may result causing property damage, personal injury or death.

Do not store or use gasoline or other flammable vapors and liquids in the vicinity of this appliance.

WARNING: Glass Handling

The glass must only be removed by a qualified person. Gloves should be worn when removing the glass.

Use suction cups when installing or removing glass. Failure to do so may result in loss of control, causing breakage and serious injury. Ensure the suction cup is properly attached and rated for the glass weight.

WARNING: Installation and Service

Installation and service must be performed by an authorized qualified installer, service agency or gas supplier.

Any alteration to the product that causes soot or carbon to form and results in damage is not the responsibility of the manufacturer.

ONLY a qualified person may open the door/remove the glass.

Do not modify or substitute any part of this appliance.

WARNING: Electrical Grounding

These direct vent appliances must be electrically grounded in accordance with the local codes or, in the absence of local codes, with National Electric code, ANSI/NFPA 70, or the Canadian Electric Code, CSA C22.1

WARNING: Gas Appliance

This appliance is only for use with the type of gas indicated on the rating plate. These appliances are not convertible for use with other gases unless a certified kit is used and the conversion is performed by an authorized qualified technician.

Applicable standards are ANSI Z21.50/CSA 2.22 (Vented Gas Fireplaces) and CAN/CGA 2.17-M91 (Gas-fired Appliances for Use at High Altitudes.) If your installation is at an elevation greater than 2000' in the US or 4500' in Canada, consult with the local authority having jurisdiction for gas product installations to determine their specific requirements for high altitude installations.

This gas fireplace and vent assembly MUST be vented directly to the outside and MUST NEVER be attached to a chimney serving a separate solid fuel burning appliance. Each gas appliance MUST BE a separate vent system. Common vent systems are prohibited.

This unit MUST be used with a vent system as described in this installation manual. NO OTHER VENT SYSTEM OR COMPONENTS MAY BE USED.

INSPECT the external vent cap on a regular basis to make sure that no debris, plants, trees, or shrubs are interfering with the air flow.

This appliance is for indoor use only.

NEVER OBSTRUCT the flow of ventilation air. Keep the front of the appliance CLEAR of all obstacles and materials for servicing and proper operation.

The glass panels MUST be in place and sealed before the unit can be placed into safe operation.

DO NOT OPERATE this appliance with the glass panels removed, cracked or broken. Replacement of the glass panels should be performed by a licensed or qualified service person. DO NOT strike or slam the glass panels.

The glass panels SHALL ONLY be replaced by units supplied by the manufacturer. NO SUBSTITUTE panels shall be used.

DO NOT USE abrasive cleaners on the panels. DO NOT ATTEMPT to clean the glass panels when they are hot.

TURN OFF the gas before servicing the appliance. It is recommended that a qualified service technician perform an appliance check-up/service once a year.

Any safety screen or guard removed for servicing MUST BE REPLACED before operating this appliance.

THIS UNIT IS NOT FOR USE WITH SOLID FUEL, and must only be used with gas supply conditions as indicated on the rating label.

DO NOT USE this appliance if any part has been under water. Immediately call a qualified service technician to inspect the unit and to replace any part of the control system and any gas control that has been under water.

DO NOT use this appliance as a temporary source of heat during construction.

This appliance is a vented gas fireplace. It must not be used for any other purposes such as drying clothes, etc.

If the pilot flame is extinguished either intentionally or unintentionally, no attempt should be made to re-light the gas until at least 3 minutes have elapsed.

Dimensions will appear as INCHES”/metric throughout this manual. For convenience, the inches are rounded to the nearest 1/16” when converted. If greater accuracy is required, use the metric dimensions.

4 THE CONTROLS

The control system for the Element4 fireplaces consist of three major components:

- the receiver (***Figure 4.1***)
- the remote (***Figure 4.2***)
- the gas valve (***Figure 4.3***)

The remote is the remote control by which you operate the fireplace. The receiver and the gas control are at one end of a line set which will extend approximately 50”/1270 mm from the center of the fireplace. The other end of the line set is connected to the firebox just left of center.

As shipped, the line set is wrapped together and fixed either under or beside the fireplace. When installing the fire carefully cut the black tie wraps which hold the line set to the bottom of the fireplace then carefully unwrap the line set. Lay the line set out towards the location of an access point.

Do not kink the lineset and do not bend to a radius of less than 2”/50 mm.

Pro tip: Always check the line set for loose connection plugs or broken cables, while it has not been built in.

A wall access door (not supplied) must be placed with your fireplace. When locating a wall access you must consider three types of access:

1. Line set access. The line set is to be unwrapped which allows the controls to be then placed within approximately 50”/1270 mm from the center of the fireplace, as the cable runs (***Figure 4.4***).
2. Physical access. The gas valve/receiver must be readily accessible for maintenance, etc.
3. Wireless access. The signals from the remote must get to the receiver, inside the access door. Do not put your line set in a closed off box, the signals from the receiver will not connect with the hand set remote possibly disrupting the connection.
4. Minimum size should be 10" (254mm) x 13" (300mm).
5. If the access door is the only fresh air inlet it should have a minimum air inlet area of 15 sq.in (100mm2)

The wall access may be replaced by a comparable design which offers the same access to the line setat the

4.1 Electronic ignition

The unit is operated using a remote control (***Figure 4.2***) connected to a receiver (***Figure 4.1***).
The receiver is powered by 4 pen lite (type AA) batteries or a 6V adapter; 2 penlight batteries (type AAA) are used for the remote control. The life of the batteries is about a year with normal use.

Figure 4.1 - Receiver

Figure 4.2 - Remote Control

4.1.1 Pairing the remote

Press the reset button on the receiver until you hear two beeps. After the second longer signal, let go of the reset button (***Figure 4.1***).
Within 20 seconds, press the down arrow on the remote control until see a count of 1 through 9 on the display. Two beeps will confirm communication with the receiver.

If you hear one long beep, this indicates the pairing sequence has failed or the wiring is incorrect. Re-pair the remote. See **APPENDIX B** for troubleshooting a long beep.

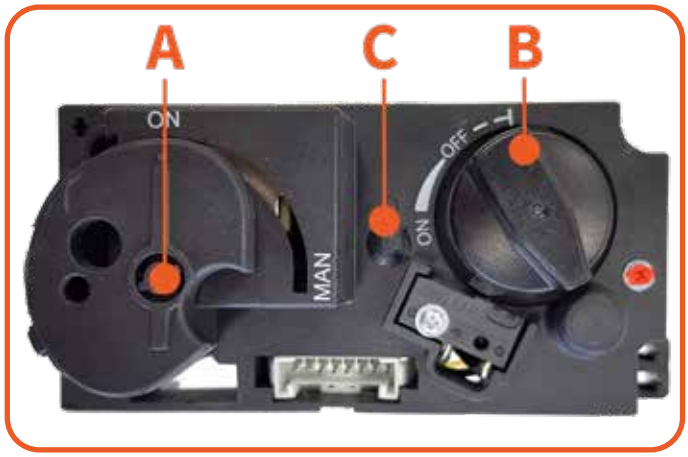

Figure 4.3 - Gas Block

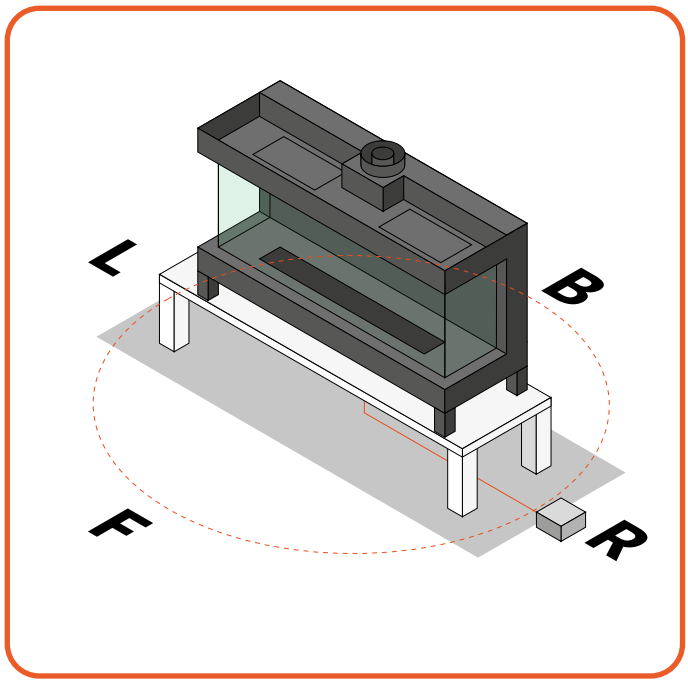

Figure 4.4 - Lineset access

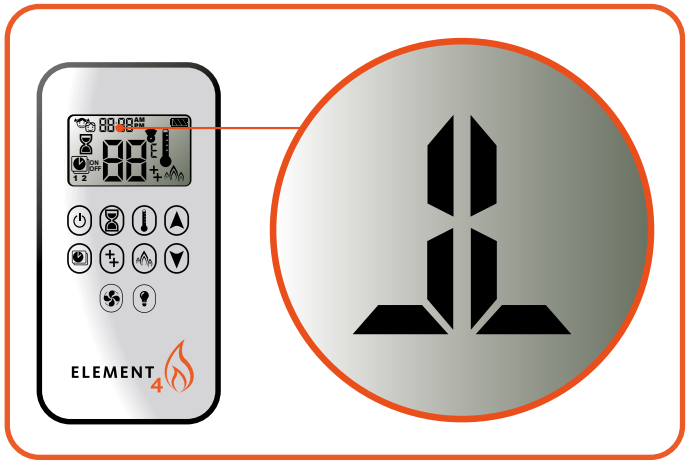

Figure 4.5 - Remote and ignition sign

4.1.2 Igniting the pilot light

Check that the control knob (A) is in the ON position (***Figure 4.3***). Press the button on/off button of your remote control and continue to hold down (3 to 5 sec.) until you hear two short beeps.
The ignition sign will appear at the top of the screen (***Figure 4.5***) Now release the button. The ignition procedure is started.

Note! If the pilot light doesn't remain lit after 3 attempts you must turn off the gas tap and warn your installer.

4.1.3 Igniting the main burner

After starting the pilot, knob B will automatically rotate counter clockwise and the main burner will start burning (***Figure 4.3***).

Note! For normal operation the knob on the gas valve cannot be in the MAN position; it must be fully in the ON position.

Note! The pilot light must ignite the main burner, evenly and without a thud If it does thud, close the gas tap and warn your installer.

If the 2nd thermocouple is not properly heated within 29 seconds the fire will shut itself off as a safety precaution.

So long as the 2nd thermocouple is still hot enough to produce electricity to the receiver, thus preventing the fireplace from starting, the remote will flash "OFF" to signal this safety lock out.

Allow time for the 2nd thermocouple to cool down before attem pting a start. The system is ready to start when the flashing "OFF" becomes solid on the remote and pressing the ON/OFF button produces a response from the valve. Always wait 5 minutes after turning the pilot light off before you start the pilot flame again.

4.1.4 Adjusting the burner pressure

In the case that a fireplace has the incorrect burner pressure, one may adjust this by removing the little black cap (C in ***Figure 4.3***) and turn the small screw underneath.
Always consult the installer / manufacturer of the fireplace, before making adjustments. Not doing so may result in loss of warranty.

4.1.5 Switching off the fireplace

You switch off the fireplace by pressing the on/off button, this also turns off the pilot light!

5 ELECTRONICS

5.1 Electrical requirements

The Element 4 fireplaces use a receiver and remote control for their burner operation. The remote control comes with two AAA batteries and the receiver is powered by a 120V AC adapter, included. The fireplace MUST be powered by the AC adapter that is supplied with the fireplace in the black box for improved reliability and customer satisfaction.

The installer must provide an approved 120V AC receptacle to be placed within the six foot cord limit of the AC adapter.

The receiver MUST be powered by the supplied AC adapter. Four (4) AA batteries may be used only for on-demand electrical requirement during a power outage. Remove batteries after use to avoid battery corrosion. Battery corrosion will damage the receiver.

Warning

Electrical work must be performed by a qualified, licensed electrician. All wiring shall be in compliance with all local, city, and state codes.

5.1.1 Electrical grounding

These direct vent appliances must be electrically grounded in acoordance with the local codes or, in the absence of local codes, with National Electric Code, ANSI/NFPA 70 or the Canadian Electric Code, CSA C22.1.

5.2 (Replacement) parts

Figure 15.1 shows a simplified connection circuit for the fireplace.

#	Description	#	Description
(1)	Gas Valve	(8)	Quad burner Module
(2)	Receiver	(9)	LED Module
(3)	Main Burner	(10)	12V Adapter
(4)	Second Burner	(11)	LED panels
(5)	Third Burner	(12)	WiFi box (optional)
(6)	Pilot assembly		
(7)	2nd Thermocouple		
(8)	Quad Burner Module		
(9)	Led Module		

Table 5.1

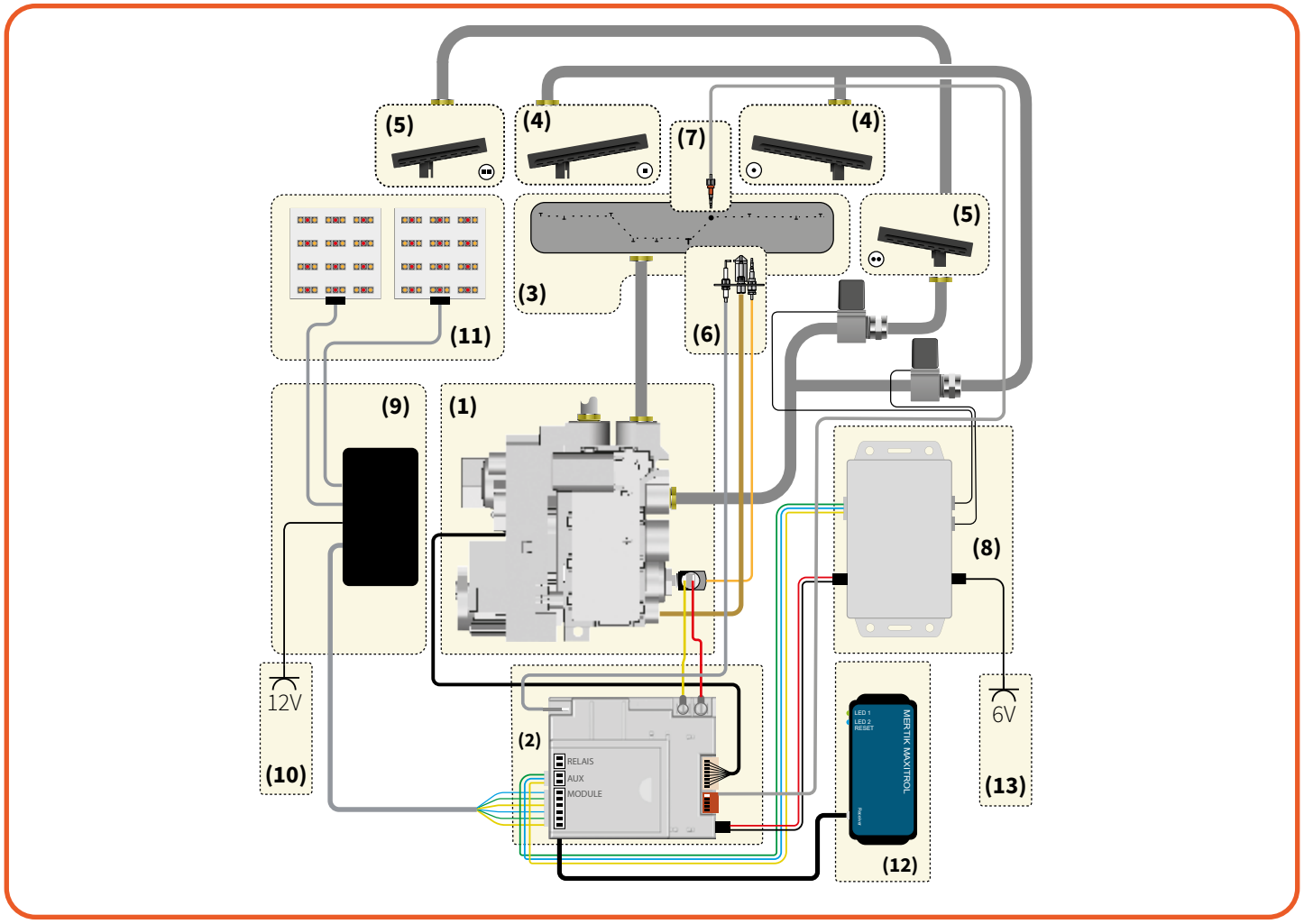

Figure 5.1 - Schematic Electronic Circuit

5.3 Remote control

The following pages contain detailed instructions about the functions of the 10 button remote.

Software Version
Press ⌛ and ▲ buttons simultaneously. Software version is displayed.
Remote Model Number
Press ⌛ and ▼ buttons simultaneously. Remote model number is displayed.

5.3.1 Activating/Deactivating Functions

The following functions can be disabled on the remote:

- CHILD PROOF (To activate press ⏻ and ▼ buttons simultaneously. displayed and the remote is rendered inoperable (except for off function).
- PROGRAM MODE
- THERMOSTATIC MODE (also deactivates Program Mode)
- ECO MODE
- LIGHT/DIMMER OPERATION
- CIRCULATING FAN OPERATION
- AUXILIARY FEATURE
- COUNTDOWN TIMER

If a deactivated button is pressed, there is no function, and two horizontal bars are displayed. Deactivation remains in effect after change of batteries.

To Deactivate a function:

1. Install batteries. All icons are displayed and flashing.
2. While the icons are flashing, press the relevant function button and hold for 10 sec.
3. The function icon will flash until deactivation is complete. Deactivation is complete when the function icon and two horizontal bars are displayed.

To Activate a function:

1. Install batteries. All icons are displayed and flashing.
2. To activate a function, press the relevant button and hold for 10 sec.
3. The function icon will continue to flash until activation is complete. Activation is complete when the function icon is displayed.

5.3.2 Automatic Turndown.

In Manual/Temperature/Timer modes, the valve will turn to pilot flame if there is no change in flame height for a six hour period. In Temperature or Timer mode, if the ambient room temperature changes, the flame height will adjust automatically to maintain set temperature and the fire will continue to function normally. The valve will turn to pilot flame if the set temperature and the ambient room temperature remain the same over a six hour period.

2. The valve turns to pilot flame if the temperature in the receiver is higher than 140°F/60°C. The burners comes back on only when the temperature is below 140°F/60°C.

5.3.3 Automatic Shut Off.

1. With low battery power in the receiver, the system shuts off the fire completely. This does not happen if the power supply is interrupted.

2. The system shuts off the fire completely if there is no change in flame height for 5 days.

3. The system shuts off the fire if the main burner does not completely ignite approximately 29 seconds after ignition or after pushing the ▲ **button.**

5.3.4 Power outage operation

In the event of a power failure, the fireplace will not shut down automatically. This is a normal characteristic of the gas control system and is not a malfunction. The safety system is designed to operate independently of the main power supply. If no batteries are installed in the receiver during a power outage, the fireplace must be turned off manually by rotating the gas control knob to the OFF position. Alternatively, batteries can be installed in the receiver to regain control via the remote. Always ensure the fireplace is switched off when unattended during a power interruption.

10 BUTTON REMOTE CONTROL

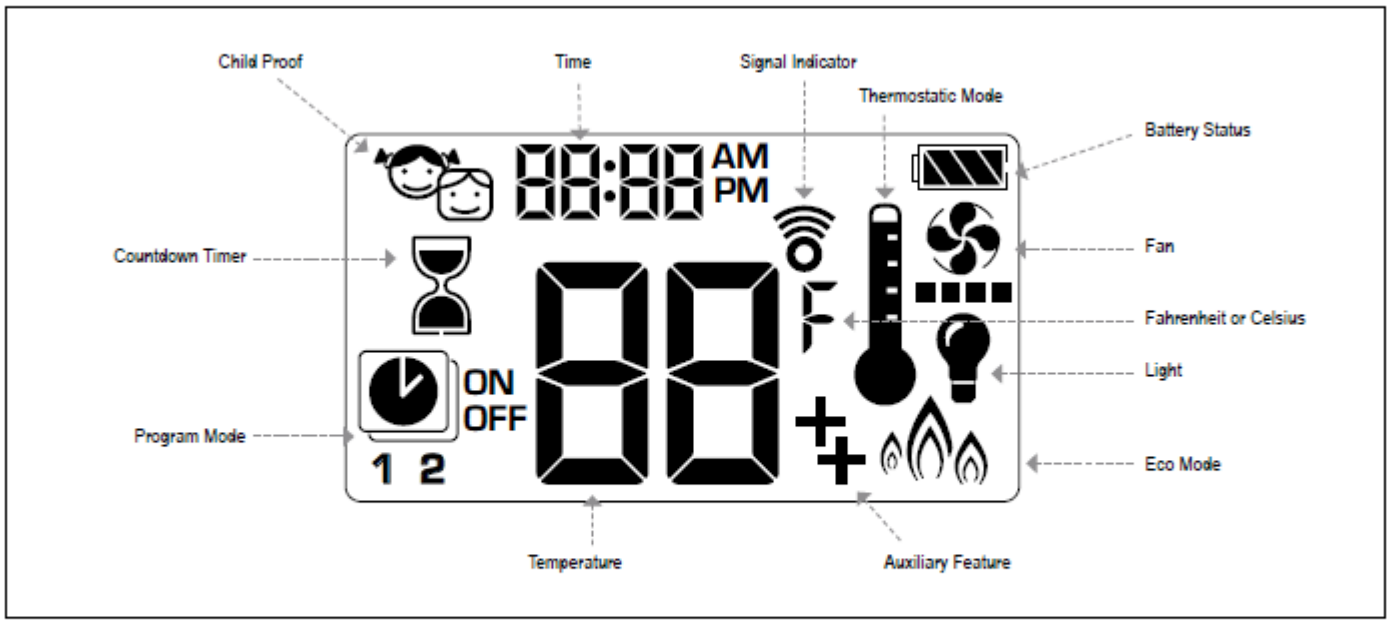

SETTING FAHRENHEIT or CELSIUS

To change between °C and °F, press ⏻ and ⌛ buttons simultaneously.

NOTE: Choosing °F results in a 12 hour clock. Choosing °C results in a 24 hour clock.

CHILD PROOF

ON:
To activate press ⏻ and ▼ buttons simultaneously. displayed and the handset is rendered inoperable, except for the off function.

OFF:
To deactivate press ⏻ and ▼ buttons simultaneously. disappears.

SETTING the TIME

1. Press ▲ and ▼ buttons simultaneously. **Day** flashes.
2. Press ▲ or ▼ button to select a number to correspond with the day of the week (e.g. 1=Monday, 2=Tuesday, 3=Wednesday, 4=Thursday, 5=Friday, 6=Saturday, 7=Sunday).
3. Press ▲ and ▼ buttons simultaneously. **Hour** flashes.
4. To select hour press ▲ or ▼ button.
5. Press ▲ and ▼ buttons simultaneously. **Minutes** flash.
6. To select minutes press ▲ or ▼ button.
7. To confirm press ▲ and ▼ buttons simultaneously or wait.

MANUAL MODE (HANDSET)

NOTICE

BEFORE OPERATING
1. Make sure MANUAL knob on the GV60 valve is in the **ON**, full counterclockwise position.
2. Place the ON/OFF switch (if equipped) in the **I** (ON) position.

TO TURN ON FIRE

⚠ WARNING

When pilot ignition is confirmed, motor turns automatically to maximum flame height.

Handset One-Button Operation
(Default Setting)
- Press button until two short beeps and a blinking series of lines confirms the start sequence has begun; release button.
- Main gas flows once pilot ignition is confirmed.
- Handset automatically goes into Manual Mode after main burner ignition.

NOTICE

Change from one-button to two-button ignition operation by pressing and holding button for 10 sec. immediately after installing batteries. **ON** is displayed and **1** is flashing. When change is complete **1** will change to **2**.

Handset Two-Button Operation
- Press and button simultaneously until two short beeps and a blinking series of lines confirms the start sequence has begun; release buttons.
- Main gas flows once pilot ignition is confirmed.
- Handset automatically goes into Manual Mode after main burner ignition.

NOTICE

Change from two-button to one-button ignition operation by pressing and holding button for 10 sec. immediately after installing batteries. **ON** is displayed and **2** is flashing. When change is complete **2** will change to **1**.

STANDBY MODE (PILOT FLAME)

Handset
- Press and hold button to set appliance to pilot flame.

TO TURN OFF FIRE

Handset
- Press button to turn off.

NOTE: There is a 5 sec delay before the next ignition is possible.

FLAME HEIGHT ADJUSTMENT

Handset
- To increase flame height press and hold button.
- To decrease flame height or to set appliance to pilot flame, press and hold button.

DESIGNATED LOW FIRE and HIGH FIRE

NOTE: Backlight must be on for high fire and low fire double-click operation.

- To go to low fire, double-click button. LO is displayed.

NOTE: Flame goes to high fire first before going to low fire.

- To go to high fire, double-click button. HI is displayed.

COUNTDOWN TIMER

ON/SETTING:
1. Press and hold button until displayed, and **hour** flashes.
2. To select hour press or button.
3. To confirm press button. **Minutes** flash.
4. To select minutes press or button.
5. To confirm press button or wait.

OFF:
Press button, and countdown time disappear.

NOTE: At end of countdown time period, the fire turns off. The Countdown Timer only works in Manual, Thermostatic, and Eco Modes. Maximum countdown time is 9 hours and 50 minutes.

MODES of OPERATION

Thermostatic Mode
The room temperature is measured and compared to the set temperature. The flame height is then automatically adjusted to achieve the set temperature.

Program Mode
Programs 1 and 2, each can be programmed to go on and off at specific times at a set temperature.

Eco Mode
Flame height modulates between high and low. If the room temperature is lower than the set temperature, the flame height stays on high for a longer period of time. If the room temperature is higher than the set temperature, the flame height stays on low for a longer period of time. One cycle lasts approx. 20 min.

THERMOSTATIC MODE

ON:
Press button. displayed, preset temperature displayed briefly, and then room temperature displayed.

OFF:
1. Press button.
2. Press or button to enter Manual Mode.
3. Press button to enter Program Mode.
4. Press button to enter Eco Mode.

SETTING:
1. Press button and hold until displayed, temperature flashes.
2. To adjust set temperature press or button.
3. To confirm press button or wait.

PROGRAM MODE

ON:
Press button. , **1** or **2**, **ON** or **OFF** displayed.

OFF:
1. Press or or button to enter Manual Mode.
2. Press button to enter Thermostatic Mode.
3. Press button to enter Eco Mode.

NOTE: The set temperature for Thermostatic Mode is the temperature for the on time in Program Mode. Changing the Thermostatic Mode set temperature also changes the on time temperature in Program Mode.

Default settings:
ON TIME (Thermostatic) TEMPERATURE: 21 °C (70 °F)
OFF TIME TEMPERATURE: "– –" (pilot flame only)

TEMPERATURE SETTING:
1. Press button and hold until flashes. **ON** and set temperature (setting in Thermostatic Mode) displayed.
2. To continue press button or wait. , **OFF** displayed, temperature flashes.
3. Select off temperature by pressing the or button.
4. To confirm press button.

NOTE: The on (Thermostatic) and off set temperatures are the same for each day.

DAY SETTING:
5. ALL flashes. Press or button to choose between ALL, SASU, 1, 2, 3, 4, 5, 6, 7.
6. To confirm press button.

ALL selected

ON TIME SETTING (PROGRAM 1):

7. , **1**, **ON** displayed, ALL is displayed shortly, and **hour** flashes.
8. To select hour press ▲ or ▼ button.
9. To confirm press button. , **1**, **ON** displayed, ALL displayed shortly, and **minutes** flash.
10. To select minutes press ▲ or ▼ button.
11. To confirm press button.

OFF TIME SETTING (PROGRAM 1):

12. , **1**, **OFF** displayed, ALL is displayed shortly, and **hour** flashes.
13. To select hour, press ▲ or ▼ button.
14. To confirm press button. , **1**, **OFF** displayed, ALL displayed shortly, and **minutes** flash.
15. To select minutes press ▲ or ▼ button.
16. To confirm press button.

NOTE: Either continue to PROGRAM 2 and set on and off times or stop programming at this point, and PROGRAM 2 remains deactivated.

NOTE: PROGRAM 1 and 2 use the same on (Thermostatic) and off temperatures for ALL, SASU and Daily Timer (1, 2, 3, 4, 5, 6, 7). Once a new on (Thermostatic) and/or off temperature has been set, that temperature becomes the new default setting.

NOTE: If ALL, SASU or Daily Timer are programmed for PROGRAM 1 and PROGRAM 2 on and off times, these become the new default times. The batteries must be removed to clear the PROGRAM 1 and PROGRAM 2 on and off times and temperatures.

SASU or Daily Timer (1, 2, 3, 4, 5, 6, 7) selected

- Set on time and off time using same procedure as "ALL selected" (above).
- SASU: Set on time and off time for both Saturday and Sunday.
- Daily Timer: Unique on and off times may be set for a single day of the week, for multiple days of the week, or for every day of the week.
- Wait to finish setting.

AUXILIARY FEATURE

Upon ignition burner 1 is on and burner 2 is in the last setting.

ON:
To switch a burner on, press the button. displayed.

OFF:
To switch the burner off, press the button. disappears.

AUTOMATIC TURN DOWN

3 Hour No Communication Function

- The valve will turn to pilot flame if there is no communication between handset and receiver for a 3 hour period. The fire will continue to function normally when communication is restored.

Receiver Overheating
(only if module is connected)

- Valve turns to pilot flame if the temperature in the receiver is higher than 140 °F (60 °C). The main burner turns back on (manually or in Thermostatic Mode) only when the temperature is below 140 °F (60 °C).

AUTOMATIC SHUT OFF

Countdown Timer

- At end of countdown time period, the fire turns off. The Countdown Timer only works in Manual, Thermostatic, and Eco Modes. Maximum countdown time is 9 hours and 50 minutes

Low Battery Receiver

- With low battery power in the receiver the system shuts off the fire completely. This will not happen if the power supply is interrupted.

On-Demand Pilot

- This green feature eliminates gas energy consumption during extended appliance inactivity. When the appliance is inactive for an extended period of time the system automatically extinguishes the pilot. This feature helps the consumer realize cost benefits by automatically eliminating energy consumption during non-heating months and limited use.
- The programmed length of inactivity to activate the system is specified by the appliance manufacturer and cannot be altered in the field.

2nd Thermocouple Shut Off

- 2nd thermocouple Option: The system shuts off the fire if the main burner does not completely ignite approximately 20 seconds after ignition or after pushing ▲ button.
  NOTE: Before the next ignition there is a 2 minute waiting period. If the thermocouple is then still too hot, you will hear a long beep.

5.4 Element4 ProControl App.

It is possible to operate your device via smartphone or tablet using the ProControl App, available in the App Store on iOS and Google Play on Android. The app features a user-friendly, interactive interface tailored specifically for Element4 devices.

With the app, you can pre-set the temperature for up to one week, adjust flame height between high and low, activate an eco setting, control LED lighting (if available), and monitor the device status at any time via two-way communication. Multiple users can access the device by creating their own account, you can also use voice control via all Matter-supported devices and enable remote diagnostics in case of malfunction.

To use the app, the device must be equipped with a wifi box.

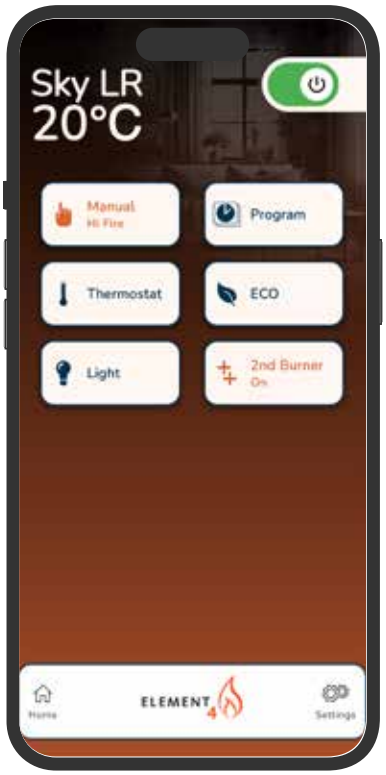

Figure 5.2 - The Pro control app

5.4.1 Router information

Minimum requirements

- Compatible with IEEE 802.11n / g / b
- WPA2 encryption
- Radio frequency 2.4 GHz band
- Wireless automatic channel: Automated search for WLAN radio channel that is free from interference.
- Support for the User Datagram Protocol (UDP)

Necessities for the installation of the ProControl:

- 220 volt electricty near the fire
- Wi-Fi code of the router
- Smart Phone or tablet
- ProControl manual
- Wifi box (8)

Wi-Fi Router

It is important to think carefully about the location of a router. This device spreads the wifi signal in and around your home. Therefore, preferably choose a central position. You prevent long distances from occurring.

Many people put the router in the meter cupboard, because that is where the internet comes in at many households. This however may not be the best choice.

For a powerful WiFi signal, the router needs as much space as possible. Therefore, do not place the device near a wall or on the ground. Some routers have multiple antennas that you can target. Try to spread these antennas so that you increase the range.

5.4.2 Jammers

Many devices also emit radio waves just like your router. These include microwave ovens, wireless doorbells, baby monitors, Bluetooth adapters, wireless music systems, DECT telephones and security cameras. These devices can disrupt your wireless network (interference), so the Wi-Fi connection is not optimal. Try to keep jammers as far away as possible from the router. Neighboring wireless networks also play a role in the Wi-Fi area.

5.4.3 Frequency

By default, most routers use the 2.4 GHz band to broadcast the Wi-Fi signal. The disadvantage is that this frequency band is very busy, so that there is quickly interference. There are a lot of competing users and jammers using the same radio waves.
Since most “older” laptops, smartphones, tablets and other devices can not connect via the 5GHz band, the ProControl module is not suitable for 5GHz band.

Should any problems occur with the ProControl application you can always check **APPENDIX B**.

5.5 Connecting to a smart home system

5.5.1 General notes

The fireplace may be operated through an external source such as a smart home (home automation) system by using the 5-pin connector on the receiver (Smart Home System Cable Type: G60- ZCE).

A required 39” (990 mm) cable, with connector, is available (p/n E4-SA-SHSC-02). The overall cable length should not exceed 26’ (7925 mm.)
Signal relays (gold contacts) or opto-couplers are recommended but not supplied. The E4-SA-SHSC-02 cable must be connected to the three smart home system contacts as shown below.

Warning: you must ensure that the fireplace is in a safe and secure environment before attempting to operate it from a remote location.

5.5.2 Sequence of operation (*Figure 15.3*)

Mode	Contact
Ignition of main burner	1 & 3
High flames	1
Pilot	3
Extinguish main burner	1, 2 & 3
Ignite second burner	1 & 2
Extinguish second burner	2 & 3

Table 5.2

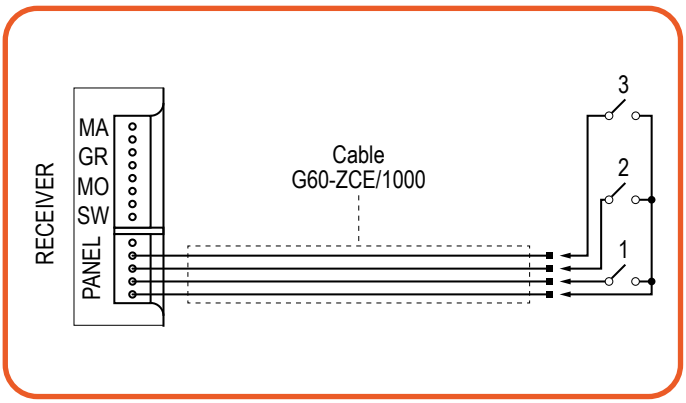

Figure 5.3 - Operation sequence overview

6 GAS INSTALLATION

This appliance has been designed, tested, and certified in accordance with applicable standards for use, performance, and safety. Installation must comply with all applicable local building codes, gas codes, and regulations in force at the time of installation.

Installation must be performed by a qualified gas installer. The installer is responsible for compliance with all applicable safety regulations and installation requirements.

This appliance is approved for use only with the type of gas specified on the rating plate. Conversion to another gas type is not permitted unless a certified conversion kit is used and the conversion is performed by an authorized, qualified technician.

6.1 General Installation Conditions

This appliance may be installed in new or existing construction. It is approved for installation in fully enclosed or mechanically ventilated rooms and does not require additional room ventilation.

Before installation, the area into which the appliance is to be fitted must be completely cleared of debris, dust, and all combustible materials.

6.2 Gas Connection Requirements

WARNING

Improper gas connection may result in fire, explosion, or serious injury.

The gas connection must comply with all applicable local codes and standards. Applicable standards include ANSI Z21.50 / CSA 2.22 (Vented Gas Fireplaces) and CAN/CGA 2.17-M91 (Gas-Fired Appliances for Use at High Altitudes).

For installations above 2,000 ft (600 m) in the United States or 4,500 ft (1,370 m) in Canada, consult the authority having jurisdiction to determine specific high-altitude installation requirements.

Gas piping must be correctly sized to prevent pressure loss. A manual shut-off valve must be installed in close proximity to the appliance. The gas connection must remain accessible at all times for service and inspection.

6.3 Line Set Handling and Accessibility

Before constructing the enclosure, carefully remove the tie wraps securing the line set to the bottom of the appliance. Unwrap the line set and route it toward the access opening.

Do not kink the line set or bend it to a radius smaller than 2" (50 mm). The line set—including the gas valve, gas piping, and electrical wiring—must remain accessible for service at all times and must not interfere with the operation of the relief doors.

Remove and dispose of all wraps and ties to ensure safe operation of these components.

6.4 Gas Line Inspection and Pressure Measurement

To verify gas pressures, appropriate measuring equipment is required. If necessary, remove the glass panel and use the designated test points (see Figure 15.4):

A: Supply pressure
B: Burner pressure

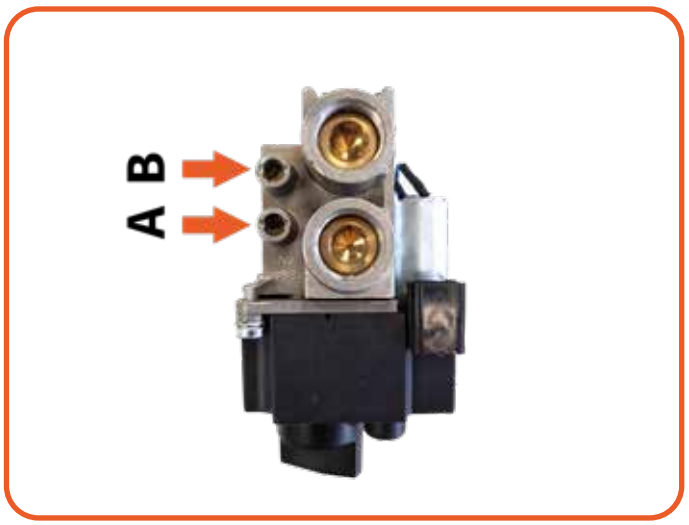

Figure 6.4 - Gas Valve Measuring Points

Ensure ignition cables hang freely beneath the appliance to allow reliable ignition. Remove any remaining cable ties or restraints.

Inspect the pilot assembly and secondary thermocouple for obstructions and verify the gas system is airtight.

6.5 Installing the Gas Supply Line

WARNING

Gas piping must be installed by a qualified plumber or gasfitter.

The gas supply line must be sized and routed in accordance with the latest edition of NFPA 54 (USA) or CAN/CSA-B149.1 (Canada), from the supply regulator to the appliance.

Do not use galvanized or plastic piping unless it is specifically rated for gas service. All materials, routing, and connections

must comply strictly with local codes and regulations.
The gas control inlet is fitted with a 3/8 in NPT connection. The gas supply piping must include:

- A dedicated manual shut-off valve
- A capped 1/8 in pressure test tapping upstream of the shut-off valve
- A service shut-off valve located within 6 ft (1.8 m) of the appliance gas control valve

The gas supply pressure at the gas control valve must not exceed the maximum supply pressure specified in the Specifications and Dimensions section of this manual.

The gas supply line must be properly connected and purged by a certified gasfitter or plumber.

6.6 Pressure Testing

WARNING

Failure to isolate the appliance during pressure testing may result in damage to the gas valve.

The appliance and its main gas valve must be disconnected from the gas supply piping system during any pressure testing at test pressures exceeding 1/2 psi (3.5 kPa).

For pressure testing at or below 1/2 psi (3.5 kPa), the appliance must be isolated by closing the equipment shut-off valve

7 GENERAL FIRE SAFETY

This chapter explains the underlying fire safety principles applicable to the installation and enclosure of the Element4 gas fireplace. The purpose is to clarify **why** specific installation requirements exist.

7.1 General fire safety framework

The installation must comply with local regulations. Where local regulations are insufficient or do not address specific fire safety aspects, **ANSI Z21.50 / CSA 2.22 and CAN/CGA 2.17** shall be considered leading. A gas fireplace can reach surface temperatures exceeding 392 °F (200 °C); therefore, only non-combustible materials are permitted in the direct vicinity of the appliance and within the enclosure.

7.2 Combustible and non-combustible materials

Combustible materials are all materials capable of igniting or smoldering, including wood, wood-based products, paper, plastics, and also materials described as 'fire-retardant', 'fire-resistant', or 'fire-rated' (including standard and Type X drywall). Non-combustible materials include, but are not limited to, stone, concrete, brick, steel, glass, and plaster.

7.3 Heat transfer principles

Heat leaves the fireplace in three ways:

Radiant heat: heat emitted through the glass. A minimum clear distance of 36" (90 cm) in front of the glass is required.

Conduction: heat transfer through solid materials. The entire fireplace construction conducts heat; direct contact with combustible materials is not permitted. Metal fasteners may create unwanted heat bridges.

Convection: heating of air inside and around the enclosure. Without sufficient airflow, heat accumulation may occur and lead to damage.

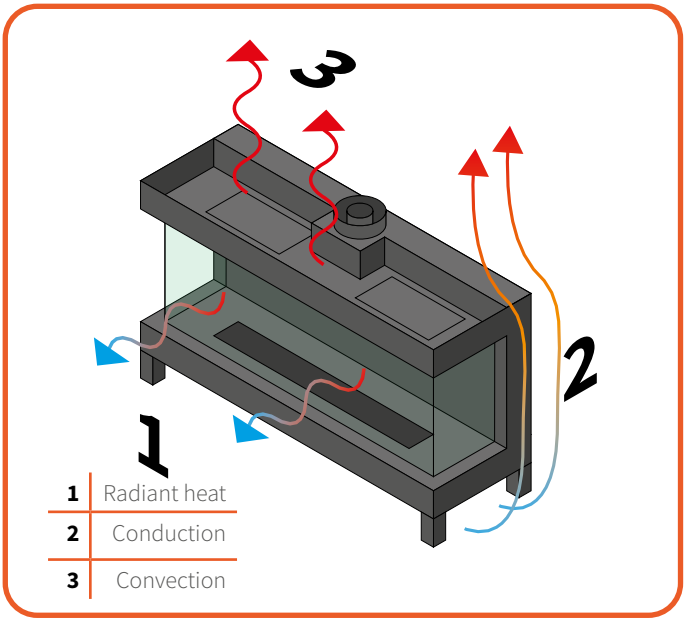

Figure 7.1 - Types of heat

7.4 Temperature limits

Combustible materials must not be exposed to temperatures exceeding 185 °F (85 °C).

Air exiting through convection openings must not exceed 185 °F (85 °C).

7.5 Key safety principles

The fireplace must never carry structural loads from the enclosure. All enclosure weight must be supported by an independent structure.

Heat bridges caused by screws, anchors, or other conductive fasteners into combustible backing materials must be avoided.

8 INSTALLATION PREPARATION

This chapter describes all requirements and checks that must be completed before the fireplace is enclosed or finished.

8.1 Location of installation

Before installing the fireplace, verify that the intended location provides sufficient space to meet the minimum installation dimensions shown in image below. These dimensions define the minimum required clearances for safe installation, proper airflow, and correct positioning of the appliance and its connections.

All indicated dimensions are minimum values and must be respected. Larger installation spaces are permitted. The fireplace must be installed on a stable, level surface and must not be used as a structural support for surrounding construction.

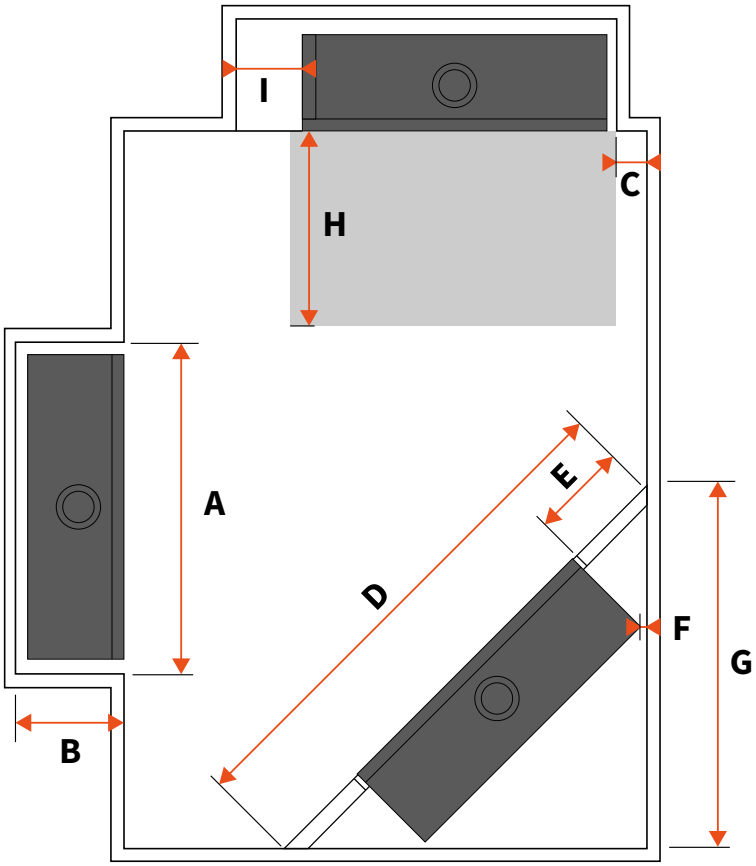

Figure 8.1 - Minimal installation dimensions

Model	A	B	C	D	E	F	G	H	I
Summum 140 F	62 ¾"	13 ⅜"	6"	88"	12 ⅝"	1"	62 3⁄16"	30"	-
mm	1593	339	150	2235	321	25	1575	750	-
Summum 140 C	-	17 3⁄16"	6"	97"	17 1⁄16"	1" non glass side	63 7⁄16"	30"	20
mm	-	452	150	2465	434	25 non glass side	1611	750	500
Summum 140 3S	-	17 3⁄16"	-	-	-	1" non glass side	-	30"	20
mm	-	452	-	-	-	25 non glass side	-	750	500
Summum 140 T	65 ⅝"	14 15⁄16"	6"	-	-	1"	-	30"	-
mm	1667	380	150	-	-	25	-	750	-
Summum 140 RD	-	14 15⁄16"	6"	-	-	1" non glass side	-	30"	20
mm	-	380	150	-	-	25 non glass side	-	750	500
Summum 140 4S	-	-	-	-	-	-	-	30"	-
mm	-	-	-	-	-	-	-	750	-

Table 8.1 Minimal installation dimensions

8.2 Framing prepation

Before installing the fireplace, the framing for the enclosure must be prepared in accordance with the minimum framing dimensions specified in Table X.

The framing shall provide sufficient internal clearance to accommodate the fireplace, required airflow, and all connections without imposing loads on the appliance. Framing dimensions shown in the table "***Minimal framing dimensions***" represent minimum values and must not be reduced. Larger framing dimensions are permitted.

The framing structure must be self-supporting and must not rest on the fireplace. Clearances between the framing and the appliance shall be maintained as specified throughout the entire enclosure.

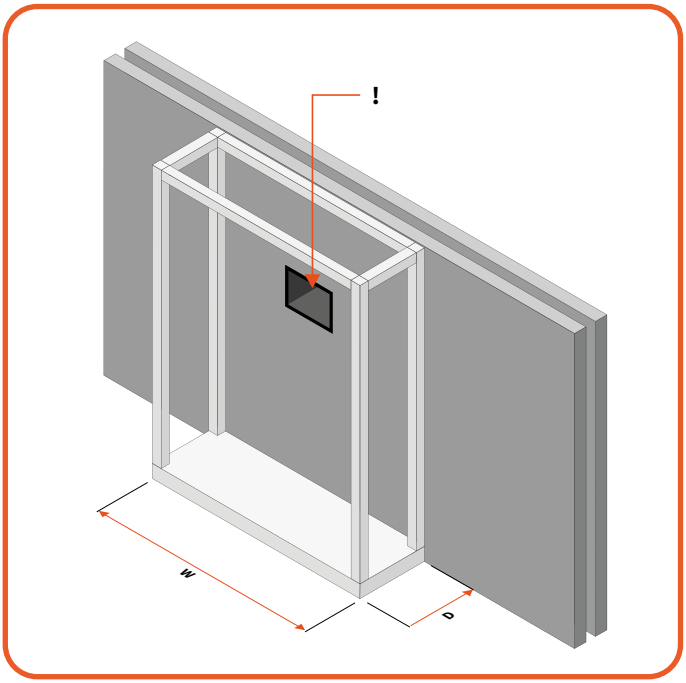

Figure 8.1 - Minimum framing dimensions

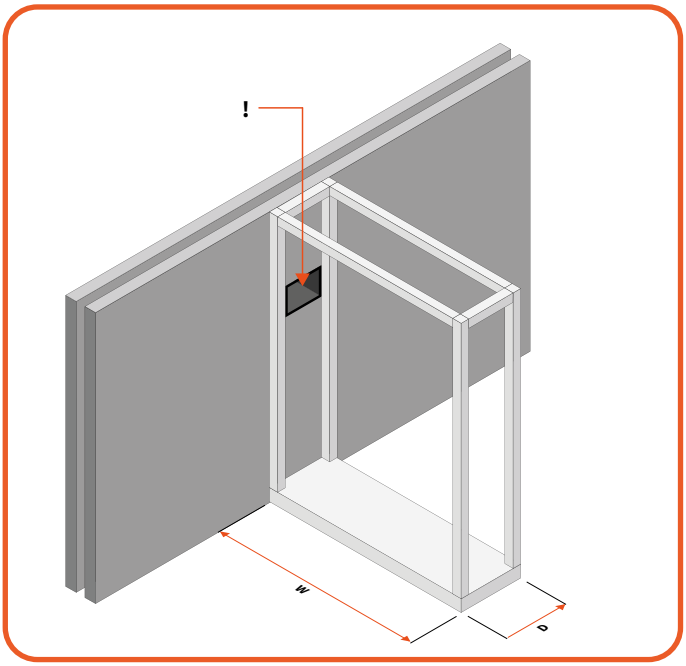

Figure 8.1 - Minimum framing dimensions

Model		W	D
Summum 140 F		62 11/16	17 11/16
	mm	1592	450
Summum 140 C		62 13/16	17 11/16
	mm	1595	450
Summum 140 3S		63 4/16	17 11/16
	mm	1606	450
Summum 140 T		64 9/16	14 15/16
	mm	1640	380
Summum 140 RD		64 19/16	14 15/16
	mm	1642	380
Summum 140 4S		62 7/16	15 13/16
	mm	1586	400

Table 8.1 Minimal framing dimensions

8.3 Firestop installation and vent layout

Before placing the fireplace into its final position, the venting system layout must be fully determined and all required firestops must be installed.

Firestops (for example, listed components from manufacturers such as DuraVent) are required at all floor, ceiling, and wall penetrations where the venting system passes through combustible construction. Firestops serve to maintain required clearances to combustible materials and to limit the spread of fire and heat between building levels.

The vent path must be laid out in advance, including:

- The vertical and horizontal routing of the vent.
- The location of all firestops and support components.

Please refer to chapter **Vent terminations** for more information.

Compliance with the vent manufacturer's installation instructions and clearance requirements.

Installing firestops and planning the vent layout prior to positioning the fireplace prevents interference with the appliance, avoids rework, and ensures that required clearances

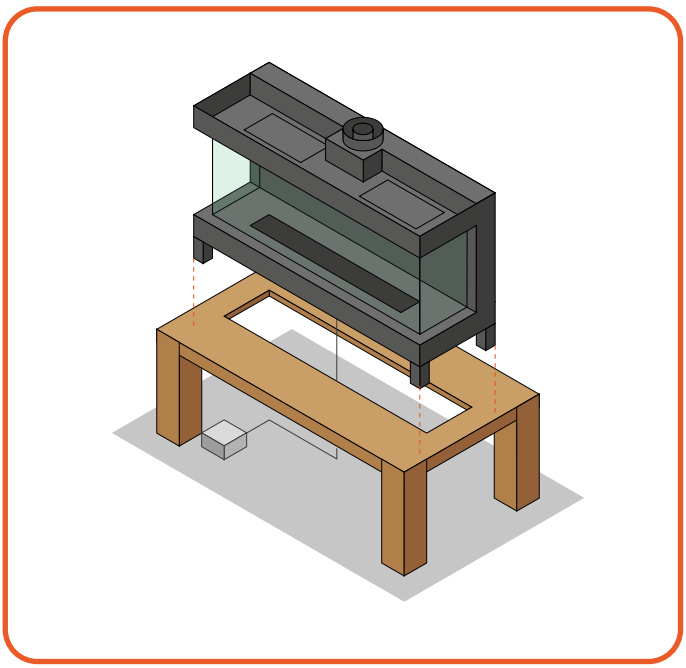

Figure 8.1 - Line set through hole in platform

can be maintained throughout the entire vent system. Please refer to chapter **Vent terminations** for more information.

* Minimum free space below the fireplace: 4" (100 mm).
* When installed on a platform, an opening must be provided to allow routing of the line set and air circulation. This platform may be constructed out of wood.
* No material of any kind may be placed between the adjustable feet and the bottom of the firebox, except for the line set.

8.4 Pre-construction test

Before the enclosure is built, a full functional test must be performed with all venting components installed. Any required corrections can then be made without removing finished construction.

8.5 Structural preparation

* Load-bearing walls and ceilings must be protected with approved non-combustible, fire-resistant panels.
* Supporting structures must maintain a minimum clearance of 2" (50 mm) from all parts of the fireplace.
* Finished walls should preferably have a minimum thickness of 1/2" (12.5 mm).

8.6 Air supply and exhaust design

The required free surface areas for fresh air intake and warm air exhaust are model-specific and must be incorporated during the design phase of the enclosure.

8.7 Wiring and piping considerations

Electrical conduits within the enclosure are only permitted if they are rated for temperatures exceeding 86 °F (30 °C) or are protected using non-combustible materials.

9 INSTALLATION AND ENCLOSURE

This chapter describes the execution of the installation and the construction requirements for the fireplace enclosure.

9.1 General installation rules

The fireplace must never be installed directly against combustible walls or ceilings.

All specified minimum clearances to combustible and non-combustible materials must be strictly observed.

9.2 Minimum volume above appliance

All models require a minimum free volume above the appliance to allow the heat generated during operation to dissipate safely. This volume is essential for proper convection and to prevent heat accumulation within the enclosure. Each model is provided with a dedicated illustration, and the required dimensions are specified in the accompanying table. These dimensions must be respected at all times

WARNING! The complete minimal volume enclosure as shown in the images are to be made from **non-combustible materials**.

9.2.1 Approved non-combustible materials

The following materials are approved to use for the construction of the enclosure

Product		**Thickness**	
Brand	Type	Imperial	Metric
Skamol	SkamoEnclosure SkamoStove	1.5 Inch	37.5 mm
Promat	PROMAFOUR system	0.5 inch	12.5mm
James Hardie building products	Hardiebacker 500 1/2" cement board	0.5 inch	12.5mm
	Hardiebacker 1/4"cement board	0.25 inch	6.25 mm

Table 9.1

9.3 Convection openings

To achieve the required convection flow, the enclosure must be fitted with convection openings. The lower openings function as fresh air inlets, allowing cooler air to enter the enclosure. As this air is heated by the appliance, it rises and is discharged through the upper openings. The upper outlet may be executed as a false ceiling, provided that sufficient free airflow area is maintained and the airflow path remains unobstructed, as shown in the drawings and table.

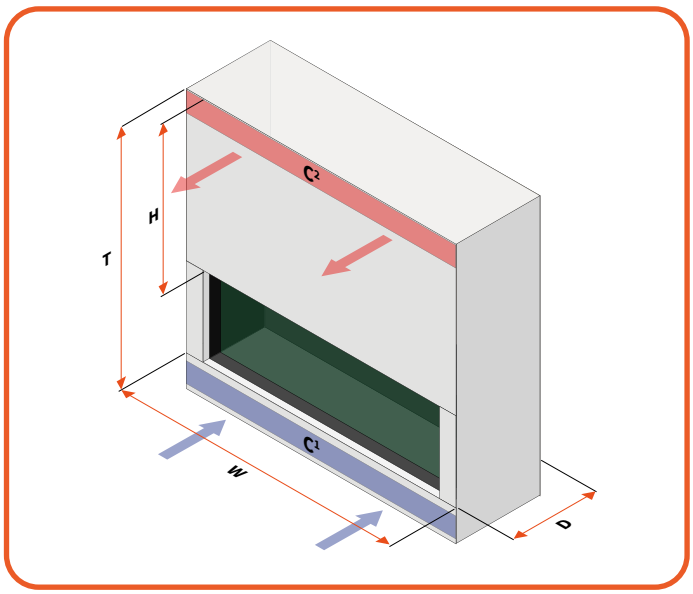

Figure 9.1 - Summum 140 F and T

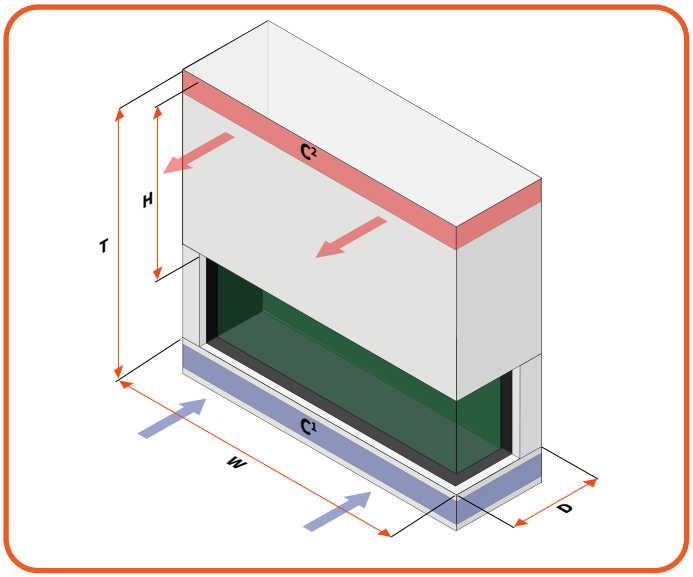

Figure 9.2 - Summum 140 C

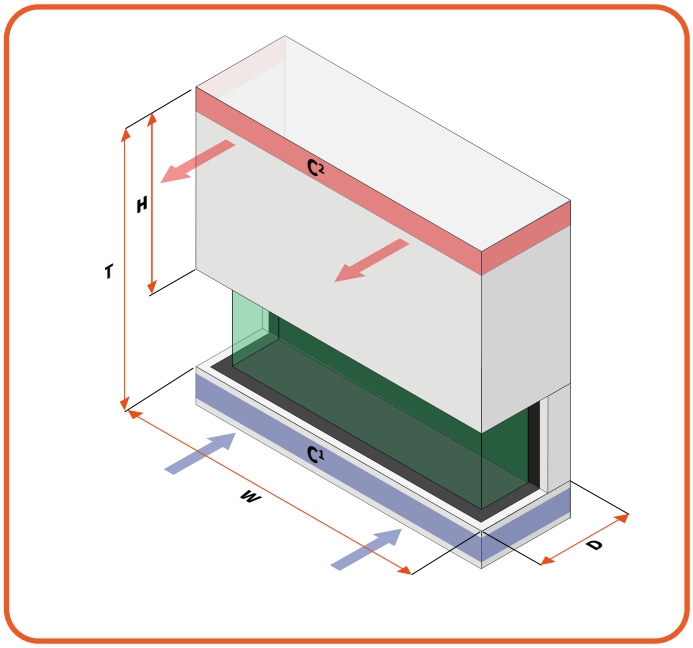

Figure 9.3 - Summum 140 3S

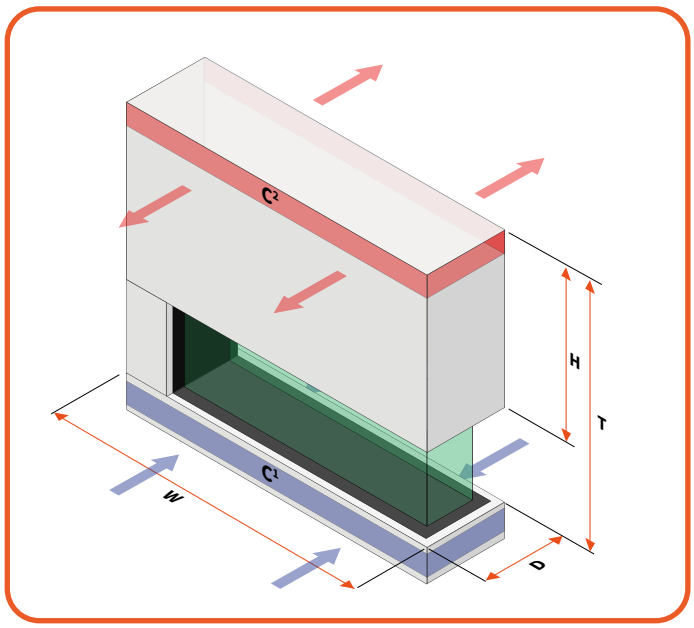

Figure 9.4 - Summum 140 RD

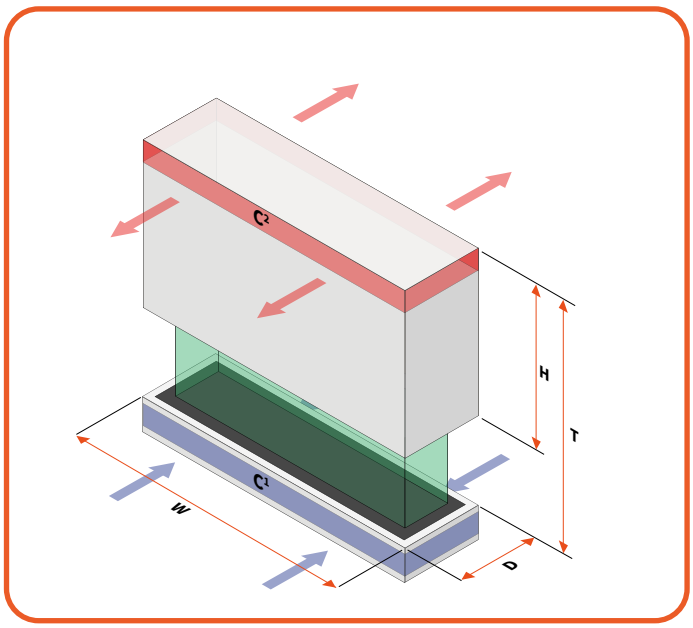

Figure 9.5 - Summum 140 4S

	W	H	D	T	C¹	C²
Summum 140 F	62 11/16	27 9/16	17 11/16	44 7/16	≥ 23 inch²	≥ 46 inch²
mm	1593	700	450	1129	≥ 150mm²	≥ 300mm²
Summum 140 C	62 13/16	27 9/16	17 11/16	44 7/16	≥ 23 inch²	≥ 46 inch²
mm	1596	700	450	1129	≥ 150mm²	≥ 300mm²
Summum 140 3S	63 4/16	27 9/16	17 11/16	44 7/16	≥ 23 inch²	≥ 46 inch²
mm	1607	700	450	1129	≥ 150mm²	≥ 300mm²
Summum 140 T	64 9/16	11 13/16	14 15/16	28 11/16	≥ 23 inch²	≥ 46 inch²
mm	1640	300	380	729	≥ 150mm²	≥ 300mm²
Summum 140 RD	64 10/16	11 13/16	14 15/16	28 11/16	≥ 23 inch²	≥ 46 inch²
mm	1641	300	380	729	≥ 150mm²	≥ 300mm²
Summum 140 4S	62 7/16	11 13/16	15 12/16	28 11/16	≥ 23 inch²	≥ 46 inch²
mm	1586	300	400	729	≥ 150mm²	≥ 300mm2

Table 9.1

W = minimum width of enclosure.
H = minimum height of enclosure above appliance.
D = minimum depth of enclosure.
T = Total minumum height, from bottom of glass to top of minimum volume above appliance.
C¹ = mumimum opening area for convection air supply.
C²= mumimum opening area for convection air exhaust.

9.4 False ceiling

A false ceiling must be constructed inside the enclosure to control convection airflow. When used, the false ceiling shall be positioned so that hot convection air is directed toward the designated upper ventilation openings.

The false ceiling is intended to prevent hot air from accumulating in the upper part of the enclosure and to ensure efficient heat removal through the convection outlets. It shall be constructed entirely from non-combustible materials. In addition, hot air discharged too close to the room ceiling may cause discoloration

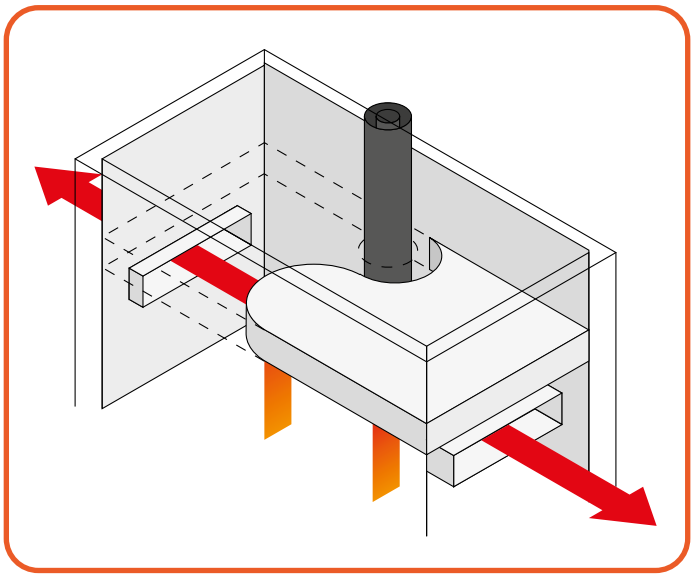

Figure 9.6 - False ceiling the enclosure

over time. By positioning the convection outlets away from the ceiling, this effect can be avoided.

- Openings must be located at **least 12" (300 mm)** from ceilings, built-in furniture, and combustible components.
- The design of ventilation openings is flexible, provided the required free surface area is maintained.

Pro tip: To avoid heat accumulation in the enclosure a non-flammable false ceiling (see ***Figure 7.6***) is to be placed directly above the outlets to guide the hot air out. The ventilation grilles need to be easy to clean at all times.

Please note

If a hot air outlet is placed closer to the ceiling than the aforementioned distances, the sudden change in temperature of the surrounding air, when exiting the enclosure, may cause the solid particles in the convection air to settle on the ceiling, causing a black or brown soot stain. It however, will not be of influence on the air flow in the enclosure.

9.5 Fastener restriction zones

During installation of the fireplace, special attention must be given to areas where fasteners such as screws, bolts, or nails are **not permitted**. These restriction zones are defined per model to prevent heat transfer, damage to internal components, and the creation of unintended heat bridges that may lead to unsafe conditions over time.

The following drawings and tables indicate, per model, the specific zones where fasteners are prohibited. These areas must remain free of any mechanical fixation. Only the approved mounting points, as shown, may be used. Failure to observe these restrictions may compromise safety and void warranty.

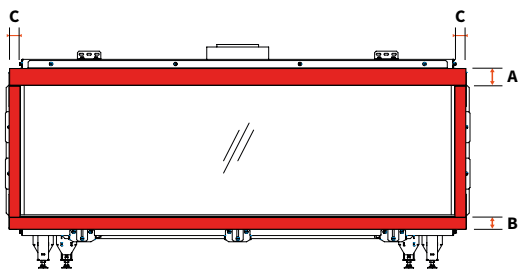

Figure 9.1 - Summum 140 F

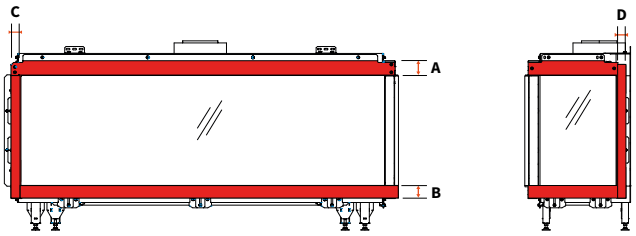

Figure 9.2 - Summum 140 C

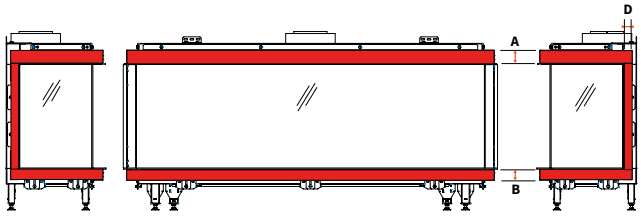

Figure 9.3 - Summum 140 3S

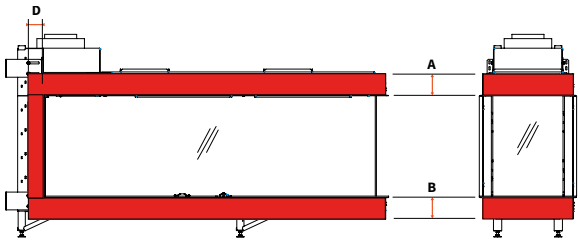

Figure 9.4 - Summum 140 RD

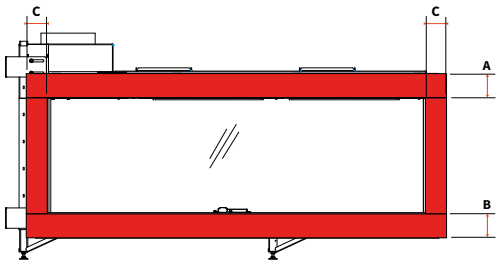

Figure 9.5 - Summum 140 T

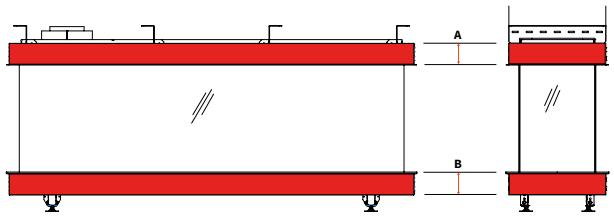

Figure 9.6 - Summum 140 4S

	A	B	C	D
Summum 140 F	2 ¼"	1 ¾"	1 ¼"	-
mm	57	45	32	
Summum 140 C	2 ¼"	1 ¾"	1 ¼"	1 3⁄16"
mm	57	45	32	30
Summum 140 3S	2 ¼"	1 ¾"	-	1 3⁄16"
mm	57	45		30
Summum 140 T	3 9⁄16"	3 7⁄16"	2 9⁄16"	-
mm	90	87	65	
Summum 140 RD	3 9⁄16"	3 7⁄16"	-	2 9⁄16"
mm	90	87		65
Summum 140 4S	3 5⁄16"	3 5⁄16"	-	-
mm	84	84		

Table 9.1

9.6 Combustible materials

Within the defined minimum enclosure volume, the use of combustible materials is not permitted. All surfaces inside this volume shall be constructed exclusively from non-combustible materials.

🔥	Combustable
⊘🔥	Non combustable

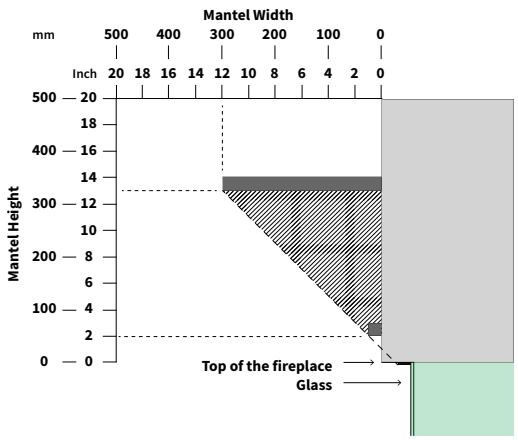

Figure 9.7 - The mantel rule

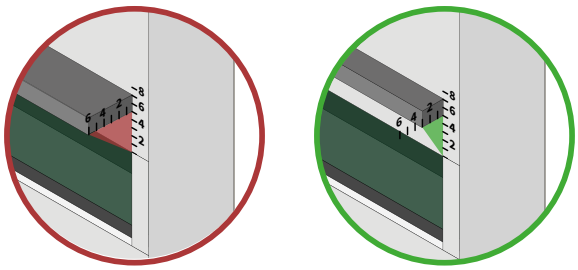

Figure 9.8 - Mantel rule examples

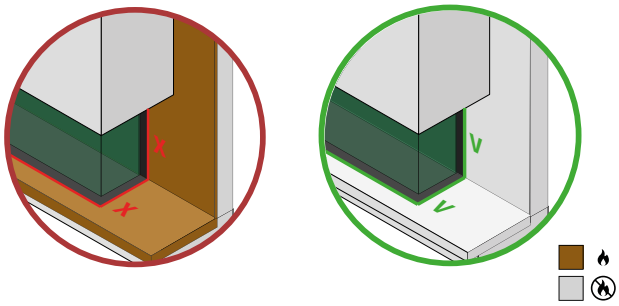

Figure 9.9 - The mantel rule also applies to sides and bottom

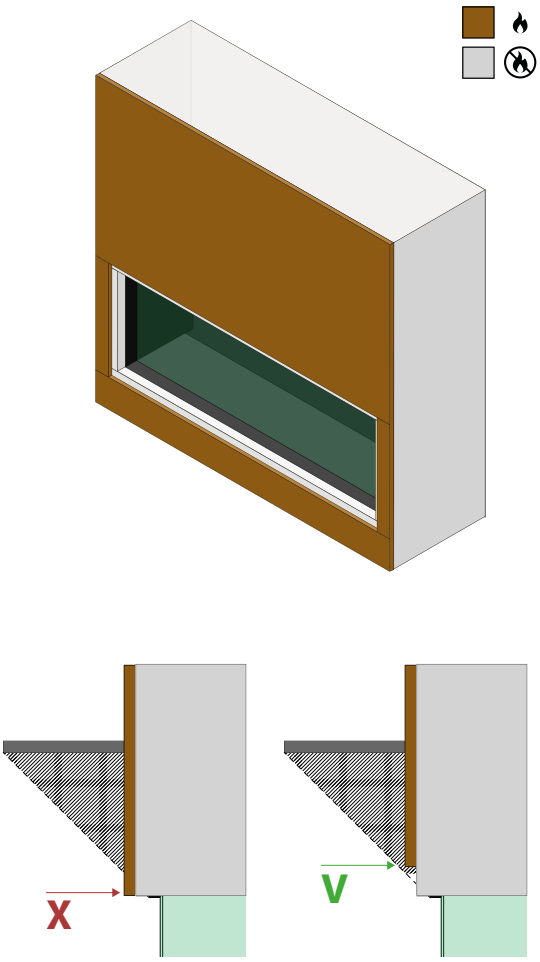

Figure 9.10 - The mantel rule appied with combustible cladding

9.6.1 The mantel rule

Outside the minimum enclosure volume, combustible cladding and finishing materials may be used, provided **the mantel rule** are fully respected. The mantel rule applies in all directions: above, below, to the left, and to the right of the fireplace opening. Combustible materials must maintain the required minimum distances from the fireplace and glass surface in every direction to prevent excessive heat exposure.

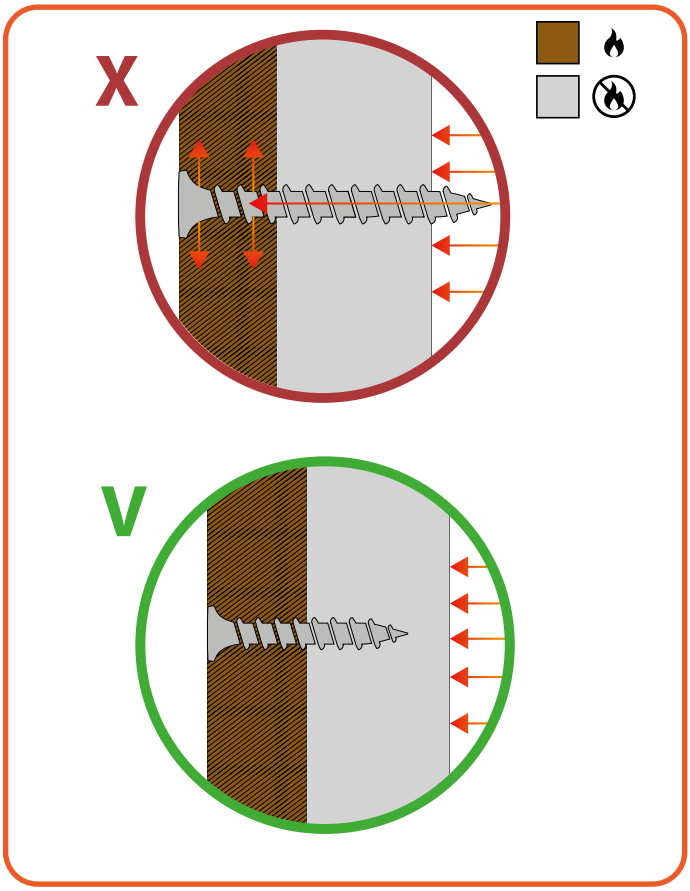

Figure 9.11 - Prevent heat bridges

9.6.2 Heat bridges

Heat bridges must be prevented at all times. Fasteners, framing members, or other conductive elements shall not transfer heat from the appliance or non-combustible enclosure components toward

Failure to observe these requirements may result in unsafe temperature rise in combustible materials.

9.6.3 Recessed television installation above the fireplace

A television may be installed above the fireplace provided that adequate measures are taken to protect it from heat exposure. Televisions are sensitive to elevated temperatures, and prolonged heat exposure may result in malfunction or permanent damage.

The television must be installed in a recessed wall construction that is separated from the fireplace enclosure. Rising heat from the fireplace must not be able to accumulate behind or beneath the television, and convection air from the fireplace must never be directed into the television recess.

The recessed construction must be made entirely of non-combustible materials and allow sufficient heat dissipation. The television may not be mounted directly to the fireplace enclosure or to any structure that is thermally connected to the appliance.

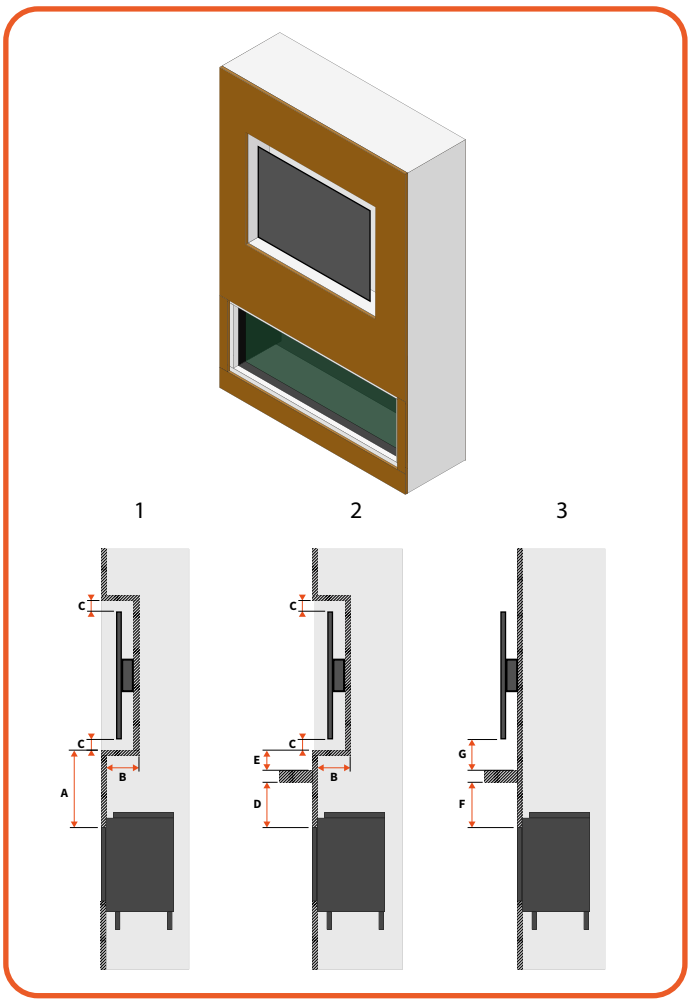

Figure 9.12 - Installing a tv above a fireplace

	Inch	mm
A	≥ 12	≥ 300
B	≤ 6"	≤ 150
C	≥ 2"	≥ 50
D	≥ 6"	≥ 150
E	≥ 2"	≥ 50
F	≥ 2"	≥ 50
G	≥ 2"	≥ 50

Table 9.1 Installing a tv above a fireplace

Electrical cables in the area above the fireplace must not be left unprotected. **Cables must either be rated for elevated temperatures or be routed within non-combustible protective conduit or sleeving**. Standard electrical cables without heat protection are not permitted in this area.

All required clearances, recess dimensions, and airflow provisions shown in the corresponding drawings must be respected. Non-compliance is outside the responsibility of the fireplace manufacturer.

9.7 Chimney construction of for Summum 140 4S

This instruction is intended for the Summum 140 4S and is a supplement to the general safety requirements for installing a gas fire, as mentioned in this manual. Because the Summum 140 4S has glass on all sides, a separate chimney breast must be made for both the top and bottom of the fireplace.

Note: Depending on the chimney breast construction, the gas connection and power supply must be taken into account. Both must be connected under the fire. Unlike a gas fireplace in a different configuration, these tubes and wires cannot be connected from above down the chimney breast itself. The electronics and gas control technology for this fireplace must be accessible at all times. So make sure that a control hatch (BDE4) is installed or provide another service option.

The Summum 140 4S is equipped with transport supports on the ends of the fireplaces. For a tight alignment of the top and bottom of the fireplace, these supports should not be removed during installation. After the installation is complete, the supports can be removed and replaced by the glass. The supports are secured at the top and bottom with two screws. (***Figure 8.2***). Four glass clamps are supplied with the fireplace, which must first be secured in place.
The Summum 140 4S is provided with four support profiles, which are fixed with two bolts on both long sides of the fireplace. (see ***Figure 8.5***) These bolts are colored red. Ensure that these bolts are loosened before the installation is started. Loosening the bolts ensures that the frame around the fireplace can move in relation to the top. This prevents possible problems with the chimney's tearing of the chimney breast!

9.7.1 Constructing the chimney

Step 1:
Make sure that the bottom part of the fireplace is securely fixed to the floor so that it cannot move.

Step 2:
Check whether the top and bottom are placed directly above each other. If the top of the stove is skewed in relation to the top, check that the windows and transport supports are properly tightened and fix the position of both parts (***Figure 8.1***).

Pay attention! When the chimney breast is fully and correctly installed, it must be possible to remove all the glass from the fireplace without it sinking or, on the other hand, ensuring that the glass cannot be put back again.

Step 3:
Make a load-bearing construction of non-combustible materials on the support profiles on the top of the fireplace. For example, use aluminum profiles such as MetalStud.

- First of all, create a frame for the fireplace itself and the same frame for the ceiling (***Figure 8.6*** to ***Figure 8.8***).
- Then place the upright profiles, which fall between the upper and lower frame. (See ***Figure 8.9*** and ***Figure 8.10***)
- Place crossbars between the profiles used for extra support and fixation of the structure. (***Figure 8.11***)

Step 4:
Pack the construction with fire-resistant material, as indicated in **CHAPTER 7.4.5** and the further desired finish (***Figure 8.12***). Bear in mind that when the finishing materials are non-flammable, the insulation and air cavities used are sufficient. The correction for convection slots / openings in the chimney breast must also be made.

Pay attention! The chimney breast must never rest on the top of the fireplace. For the sleek finish, therefore, use the frame around the fireplace to build against.

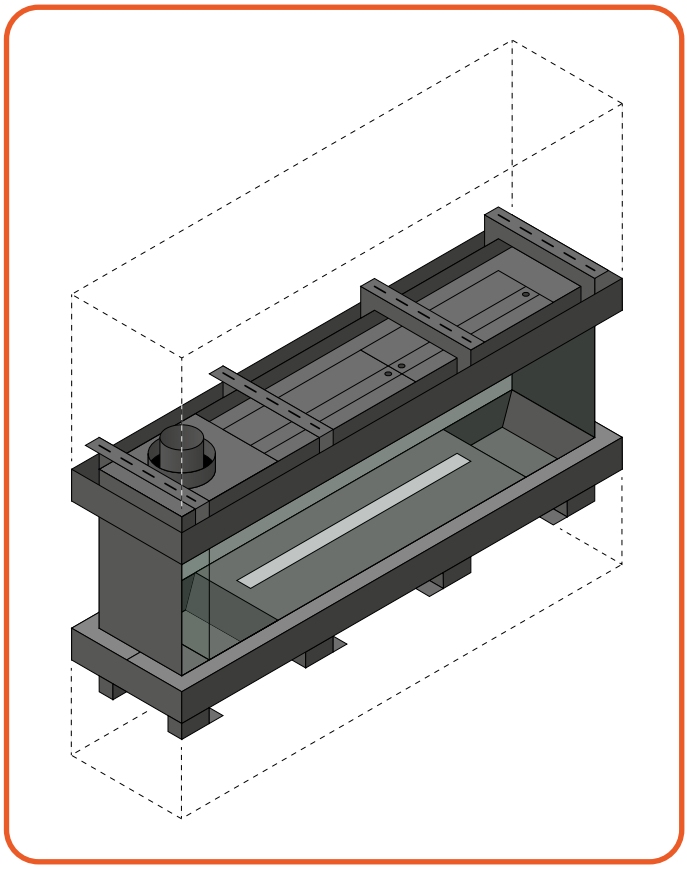

Figure 9.1 - Outlining top and bottom of the fire

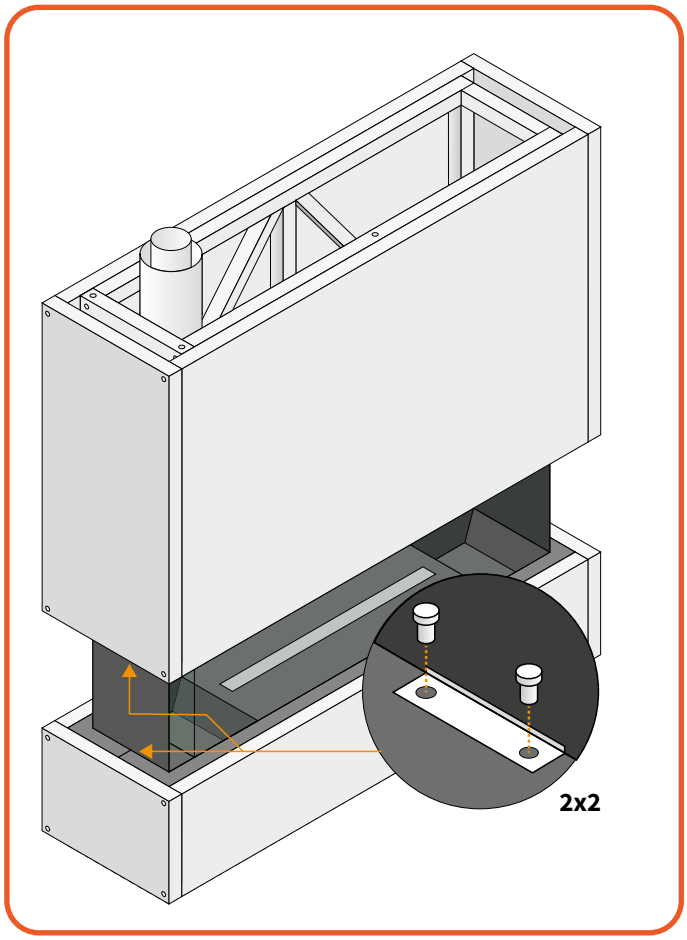

Figure 9.2 - Loosening transport brackets

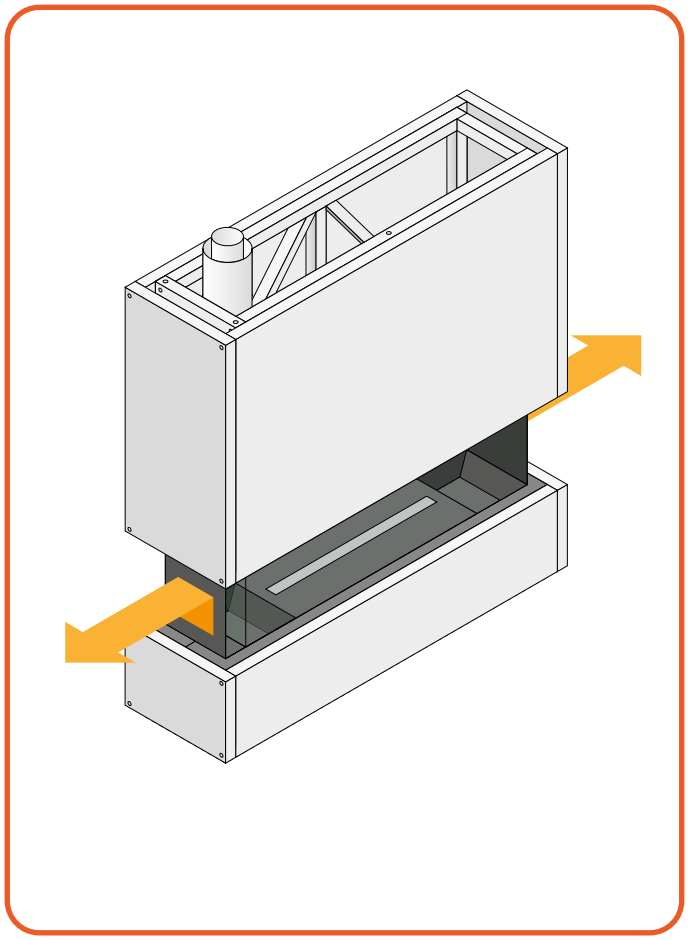

Figure 9.3 - Removing transport brackets

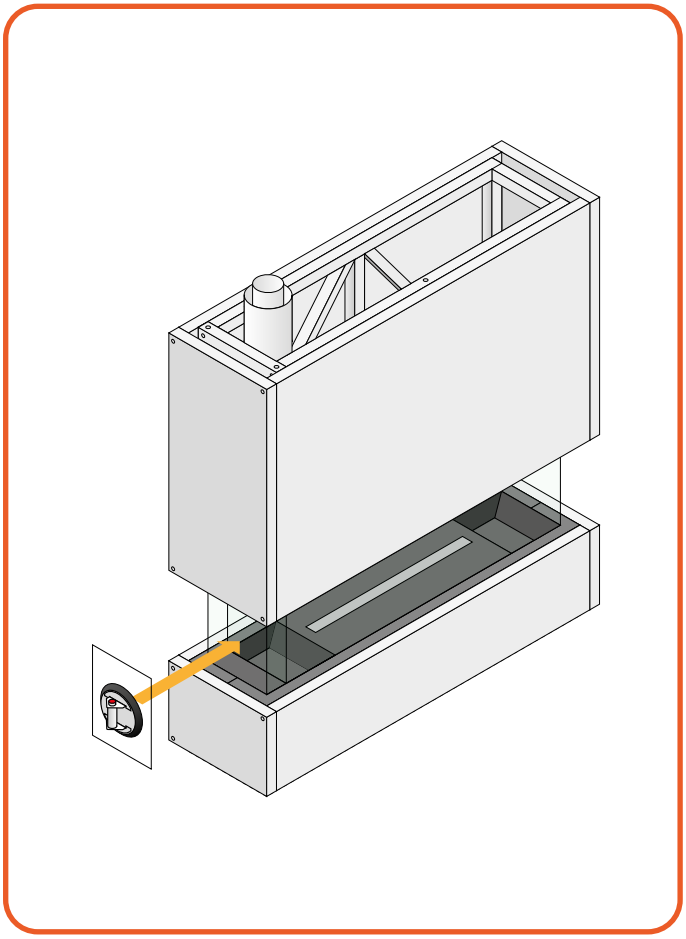

Figure 9.4 - Insert side window

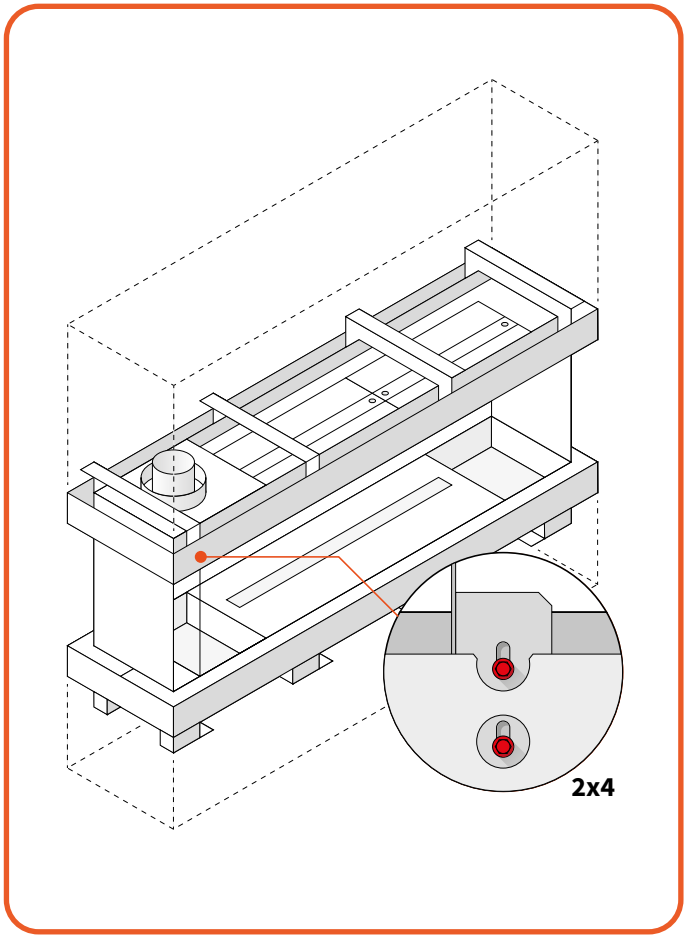

Figure 9.5 - Position of the transport brackets

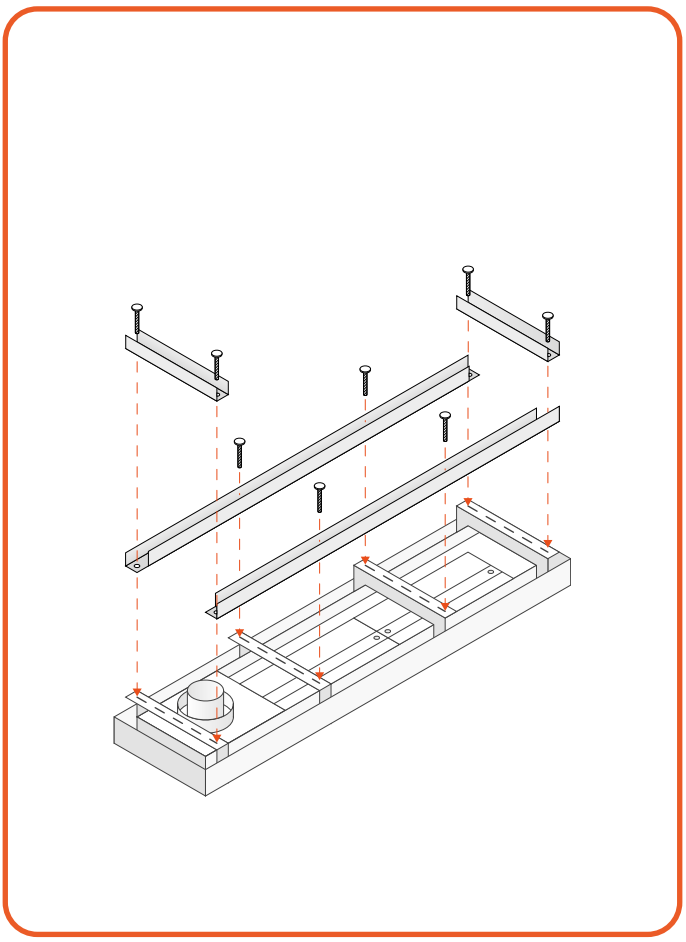

Figure 9.6 - Create a frame on top of the fireplace

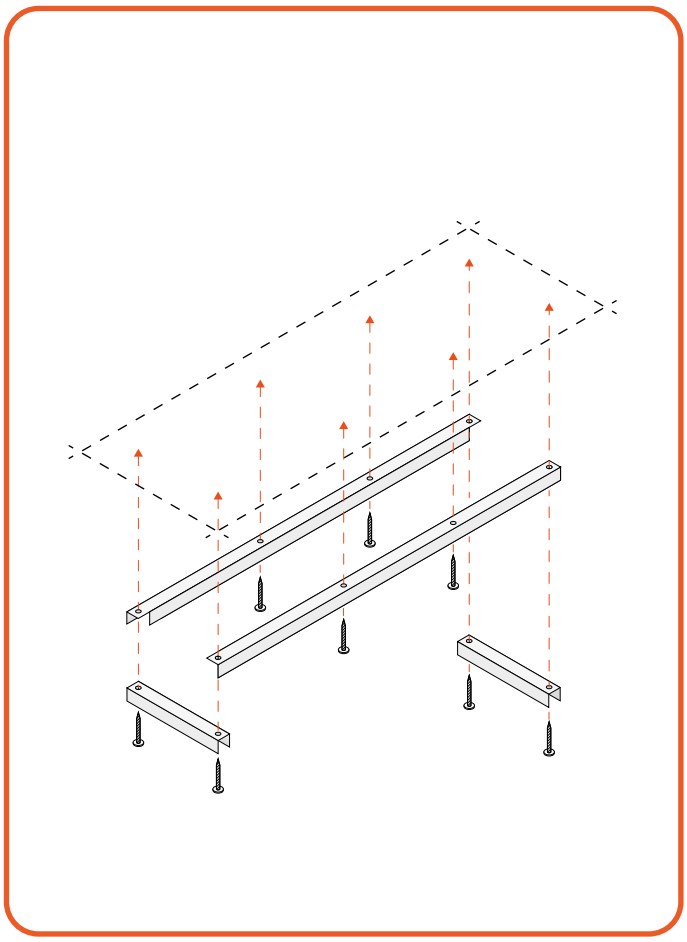

Figure 9.7 - Create a new frame on the ceiling

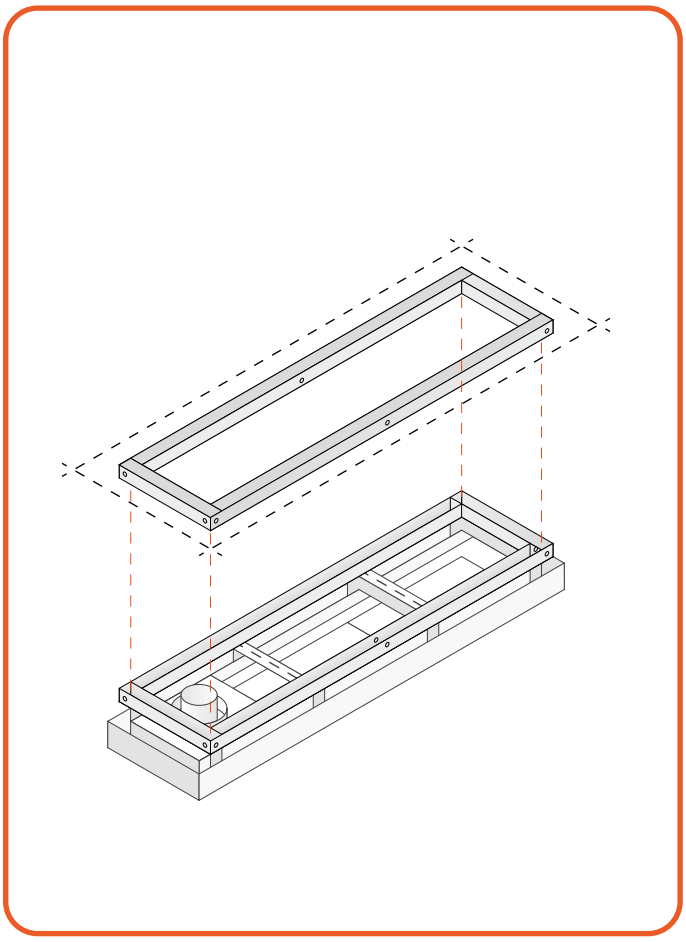

Figure 9.8 - Align both frames

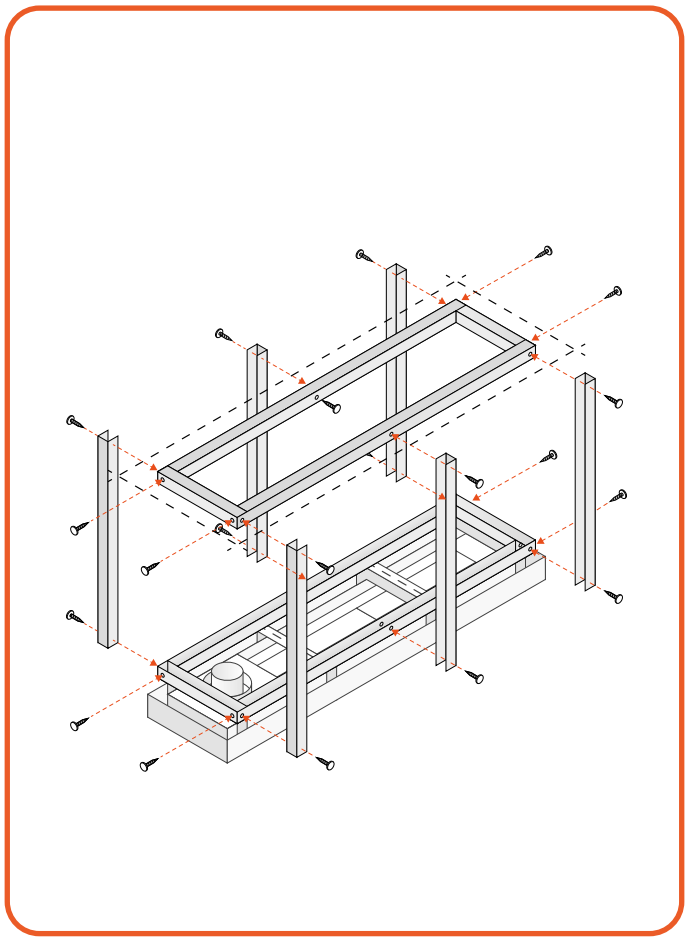

Figure 9.9 - Adding vertical insert between the frames

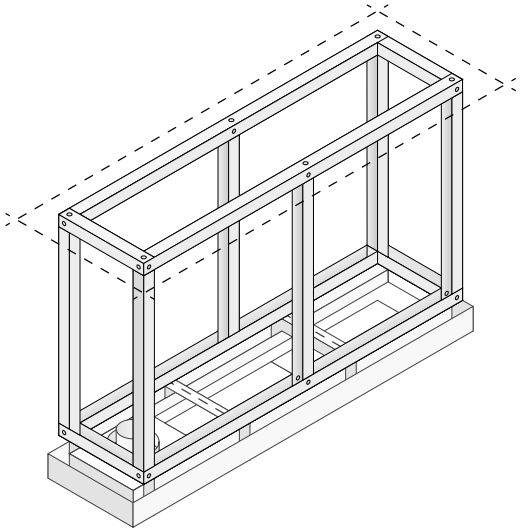

Figure 9.10 - Complete base of the frame

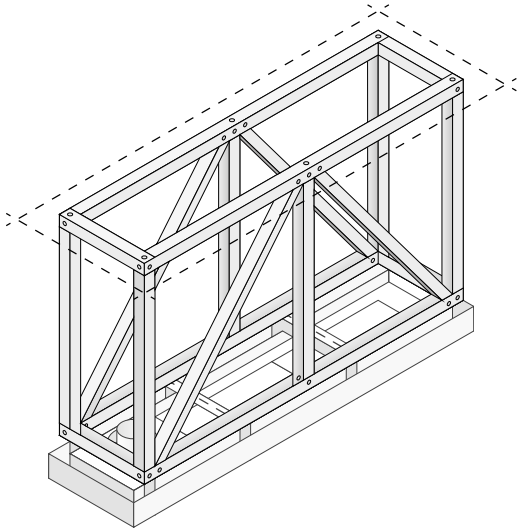

Figure 9.11 - Final esult with additional crossbars

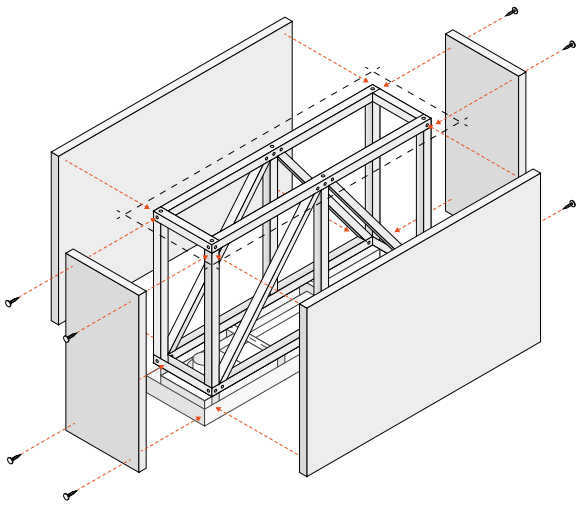

Figure 9.12 - Construction of fireproof material

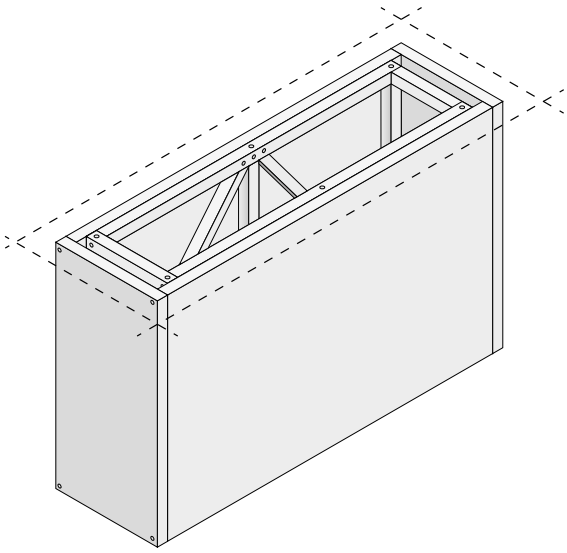

Figure 9.13 - Final contstruction of the upper chimney breast

10 CALCULATION TABLE VENT GAS REDUCTION

The calculation table shows when you need to place a vent ristrictor.

Result	Action
√	No ristrictor required
R	Position the resitrictor
X	No good operation guaranteed *

10.1 Horizontal terminal

Imperial

Total vertical Section	20"	3'	4'6"	6'	7'6"	9'	10'6"	12'
36'	R	R	R	R	R	V	V	V
33'	R	R	R	R	R	V	V	V
30'	R	R	R	R	R	V	V	V
27'	R	R	R	R	R	V	V	V
24'	R	R	R	R	R	V	V	V
21'	R	R	R	R	R	V	V	V
18'	R	R	R	R	R	V	V	V
15'	R	R	R	R	R	V	V	V
13'6"	R	R	R	R	V	V	V	V
12'	R	R	R	R	V	V	V	V
10'6"	R	R	R	R	V	V	V	X
9'	V	V	V	V	V	V	X	X
7'6"	V	V	V	V	V	X	X	X
6'	V	V	V	V	X	X	X	X
4'6"	V	V	V	X	X	X	X	X
3'	V	V	X	X	X	X	X	X
20"	X	V	X	X	X	X	X	X

Total Horizontal Section

Metric

Total vertical Section	0 m	0,5 m	1 m	1,5 m	2 m	2,5 m	3 m
10 m	R	R	R	R	R	V	V
9 m	R	R	R	R	R	V	V
8 m	R	R	R	R	R	V	V
7 m	R	R	R	R	R	V	V
6 m	R	R	R	R	R	V	V
5 m	R	R	R	R	R	V	V
4 m	R	R	R	R	R	V	V
3,5 m	R	R	R	R	R	V	V
3 m	V	V	V	V	V	V	V
2,5 m	V	V	V	V	V	V	X
2 m	V	V	V	V	V	X	X
1,5 m	V	V	V	V	X	X	X
1 m	V	V	V	X	X	X	X
0,5 m	X	V	X	X	X	X	X

Total Horizontal Section

* Perhaps the powerfan is a good solution here.

10.2 Vertical termination vent diameter

For a vertical termination the minimal starting length is **20 inches (or 0,5 meter)** before the first elbow and the minimal vertical section is **3 feet (or 1 meter).**

Note:
When the vent is **exclusively vertical**, it may be **reduced** to a **diameter 4"/6" (or 150/100mm)** pipe, given the **Total Vertical Length** is a **minimum of 7 feet (or 2 meters).** In this case you do not have to use a restriction plate.

Imperial

Total vertical Section	0	20"	3'	4'6"	6'	7'6"	9'	10'6"	12'	13'6"
72'	V	V	V	X	X	X	X	X	X	X
69'	R	R	V	V	X	X	X	X	X	X
66'	R	R	R	R	V	V	X	X	X	X
63'	R	R	R	R	R	R	V	V	X	X
60'	R	R	R	R	R	R	V	V	V	V
57'	R	R	R	R	R	R	V	V	V	V
54'	R	R	R	R	R	R	V	V	V	V
51'	R	R	R	R	R	R	V	V	V	V
48'	R	R	R	R	R	R	V	V	V	V
45'	R	R	R	R	R	R	V	V	V	V
42'	R	R	R	R	R	R	V	V	V	V
39'	R	R	R	R	R	R	V	V	V	V
36'	R	R	R	R	R	R	V	V	V	V
33'	R	R	R	R	R	R	V	V	V	V
30'	R	R	R	R	R	R	V	V	V	V
27'	R	R	R	R	R	R	V	V	V	V
24'	R	R	R	R	R	R	V	V	V	V
21'	R	R	R	R	R	R	V	V	V	V
18'	R	R	R	R	R	R	V	V	V	V
15'	R	R	R	R	R	R	V	V	V	V
13'6"	R	R	R	R	R	R	V	V	V	V
12'	R	R	R	R	R	R	V	V	V	X
10'6"	R	R	R	R	R	R	V	V	X	X
9'	V	V	V	V	V	V	V	X	X	X
7'6"	V	V	V	V	V	V	X	X	X	X
6'	V	V	V	V	V	X	X	X	X	X
4'6"	V	V	V	V	X	X	X	X	X	X
3'	V	V	V	X	X	X	X	X	X	X

Total Horizontal Section

Metric

Total vertical Section	0 m	0,5 m	1 m	1,5 m	2 m	2,5 m	3 m	3,5 m	4 m
22 m	V	X	X	X	X	X	X	X	X
21 m	R	R	V	X	X	X	X	X	X
20 m	R	R	R	R	V	X	X	X	X
19 m	R	R	R	R	R	R	V	X	X
18 m	R	R	R	R	R	R	V	V	V
17 m	R	R	R	R	R	R	V	V	V
16 m	R	R	R	R	R	R	V	V	V
15 m	R	R	R	R	R	R	V	V	V
14 m	R	R	R	R	R	R	V	V	V
13 m	R	R	R	R	R	R	V	V	V
12 m	R	R	R	R	R	R	V	V	V
11 m	R	R	R	R	R	R	V	V	V
10 m	R	R	R	R	R	R	V	V	V
9 m	R	R	R	R	R	R	V	V	V
8 m	R	R	R	R	R	R	V	V	V
7 m	R	R	R	R	R	R	V	V	X
6 m	R	R	R	R	R	R	V	V	X
5 m	R	R	R	R	R	R	V	V	X
4 m	R	R	R	R	R	R	V	X	X
3,5 m	R	R	R	R	R	R	V	X	X
3 m	V	V	V	V	V	V	V	X	X
2,5 m	V	V	V	V	V	V	X	X	X
2 m	V	V	V	V	V	X	X	X	X
1,5 m	V	V	V	V	X	X	X	X	X
1 m	V	V	V	X	X	X	X	X	X

Total Horizontal Section

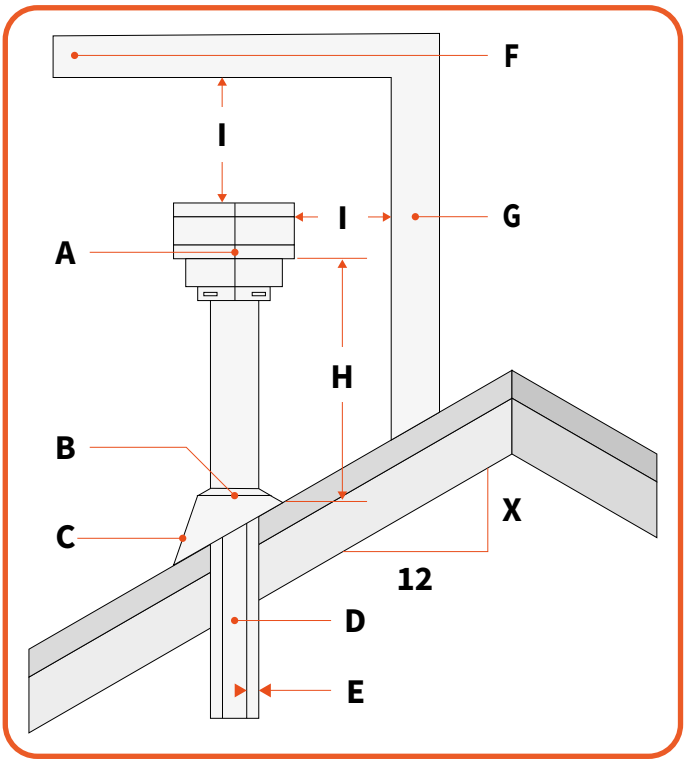

Figure 11.1 - Vertical Vent Termination Clearances

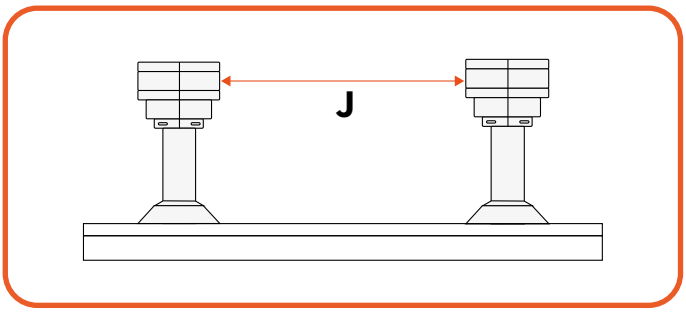

Figure 11.2 - Multiple termination clearance

11 VENT TERMINATIONS

11.1 Vertical Terminations - clearances and requirements *(Figure 10.1 & Figure 10.2)*

Important Note for Roof Terminations

These instructions should be used as a guideline and do not supersede local codes in any way. Install venting according to local codes, these instructions, the current National Fuel Gas Code (ANSI Z223.1 in the USA) or the current standard of CAN/CSA-B149.1 in Canada.

#	Description
A	Vent termination
B	Storm Collar
C	Flashing
D	Concentric vent pipe
E	Minimum clearance to combustibles 1 inch (2.5 cm)
F	Horizontal overhang
G	Vertical wall
H	Minimum height froom roof to lowest discharge opening of vent
I	Minimum distance between terminal and vertical wall / horizontal overhang = 2 feet (60 cm)
J	Minimum distance between two roof terminations 12 inches (30 cm)

11.1.1 Termination height for vents above flat or sloped roofs (Ref. NFPA 54 / ANSI Z 223.1)

The vent / air intake termination clearances above the high side of an angled roof (**H** in the table above) is as shown in the following chart:

Roof Pitch (X)	Imperial (Feet)	Metric (meters)
Flat to 6/12	1.00	0.30
6/12 to 7/12	1.25	0.38
7/12 to 8/12	1.50	0.46
8/12 to 9/12	2.00	0.61
9/12 to 10/12	2.50	0.76
10/12 to 11/12	3.25	0.99
11/12 to 12/12	4.00	1.22
12/12 to 14/12	5.00	1.52
14/12 to 16/12	6.00	1.83
16/12 to 18/12	7.00	2.13
18/12 to 20/12	7.50	2.29
20/12 to 21/12	8.00	2.44

Table 11.1

11.2 Horizontal terminations - clearances and requirements

, and the table below show a range of distances, that need to be taken into account for the installation of fireplaces with a horizontal vent termination.

		US INSTALLATION** Imperial (Metric)	CANADA INSTALLATION* Imperial (Metric)
A	Clearance above grade, veranda, porch, deck or balcony	• 12 inches* (30 cm)	• 12 inches* (30 cm)
B	Clearance to window or door that may be opened	• 6 inches (15 cm) for appliances <10k BTUh (3 kWh) • 9 inches / 22.5 kWH for appliances 10k < X <50k BTUh (3< X <15 kWh) • 12 inches (30 cm) for appliances > 50k BTUh (15 kWH) **	• 6 inches (15 cm) for appliances <10.000 BTUh(3 kWH) • 12 inches (30 cm) for appliances >10.000 BTUh(3kWh)
C	Clearance to permanently closed window (Recommended to prevent window condensation).	• 9 inches (22.5 cm)	• 12 inches (30 cm)
D	Vertical clearance to ventilated soffit located above the termination	• 18 inches (45 cm) horizontally from the center line of the termination	• 18 inches (45 cm) horizontally from the center line of the termination
E	Clearance to unventilated soffit	• 12 inches (30 cm)	• 12 inches (30 cm)
F	Min. clearance to outside corner	• 5 inches (12.5 cm)	• 5 inches (12.5 cm)
G	Min. clearance to inside corner	• 6 inches (15 cm) – SV 4.5 HT-2	• 6 inches (15 cm) – SV 4.5 HT-2
H	Clearance to each inside of center line extended above meter / regulator assembly	• 3 feet (90 cm) within a height of 15 feet (4.5 m) above the meter /regulator assembly *	• 3 feet (90 cm) within a height of 15 feet (4.5 m) above the meter /regulator assembly *
I	Clearance to service regulator vent outlet	• 3 feet (90 cm) **	• 3 feet (90 cm) *
J	Clearance to nonmechanical air supply inlet to building or the combustion air inlet to any other appliance.	• 6 inches (15 cm) for appliances <10k BTUh (3 kWh) • 9 inches / 22.5 kWH for appliances 10k < X <50k BTUh (3< X <15 kWh) • 12 inches (30 cm) for appliances > 50k BTUh (15 kWH) **	• 6 inches (15 cm) for appliances <10.000 BTUh(3 kWH) • 12 inches (30 cm) for appliances >10.000 BTUh(3kWh)
K	Clearance to a mechanical air supply inlet.	• 3 feet (90 cm) above if within 10 feet (3m) horizontally **	• 6 feet (1.8 m)*
L	Clearance above paved sidewalk or paved diveway located on public property.	• 7 feet (2.1 m) [3]	• 7 feet (2.1 m) [3]
M	Clearance under veranda porch, deck or balcony	• 12 inches (30 cm) [3]	• 12 inches (30 cm) [4]
N	Depth of alcove (Maximum)	• 6 feet (1.8 m)**	• 6 feet (1.8 m)**
O	Clearance to termination (alcove)	• 6 inches (15 cm)**	• 6 inches (15 cm)**
P	Width of alcove (Minimum)	• 3 feet (90 cm)*	• 3 feet (90 cm)*
Q	Clearance to combustible above (Alcove)	• 18 inches (45 cm)**	• 18 inches (45 cm)**
R	Top and bottom clearance from air inlet	• 3 feet (90 cm)	• 3 feet (90 cm)
S	Side clearance from air inlet	• 9 inches (22.5 cm)	• 9 inches (22.5 cm)
T	Side distance from ventilated soffit	• 6 inches (15 cm)	• 6 inches (15 cm)

Table 11.2

1 In accordance with the current CSA-B149.1 National Gas and propane installation code.

2 In accordance with the current ANSI SZ223.1/NFPA 54 National fuel gas codes.

3 A vent shall not terminate directly above a sidewalk or paved driveway which is located between two single family dwellings and serves both dwellings.

4 Only permitted if veranda, porch, deck or balcony is fully open on a minimum 2 sides beneath the floor.

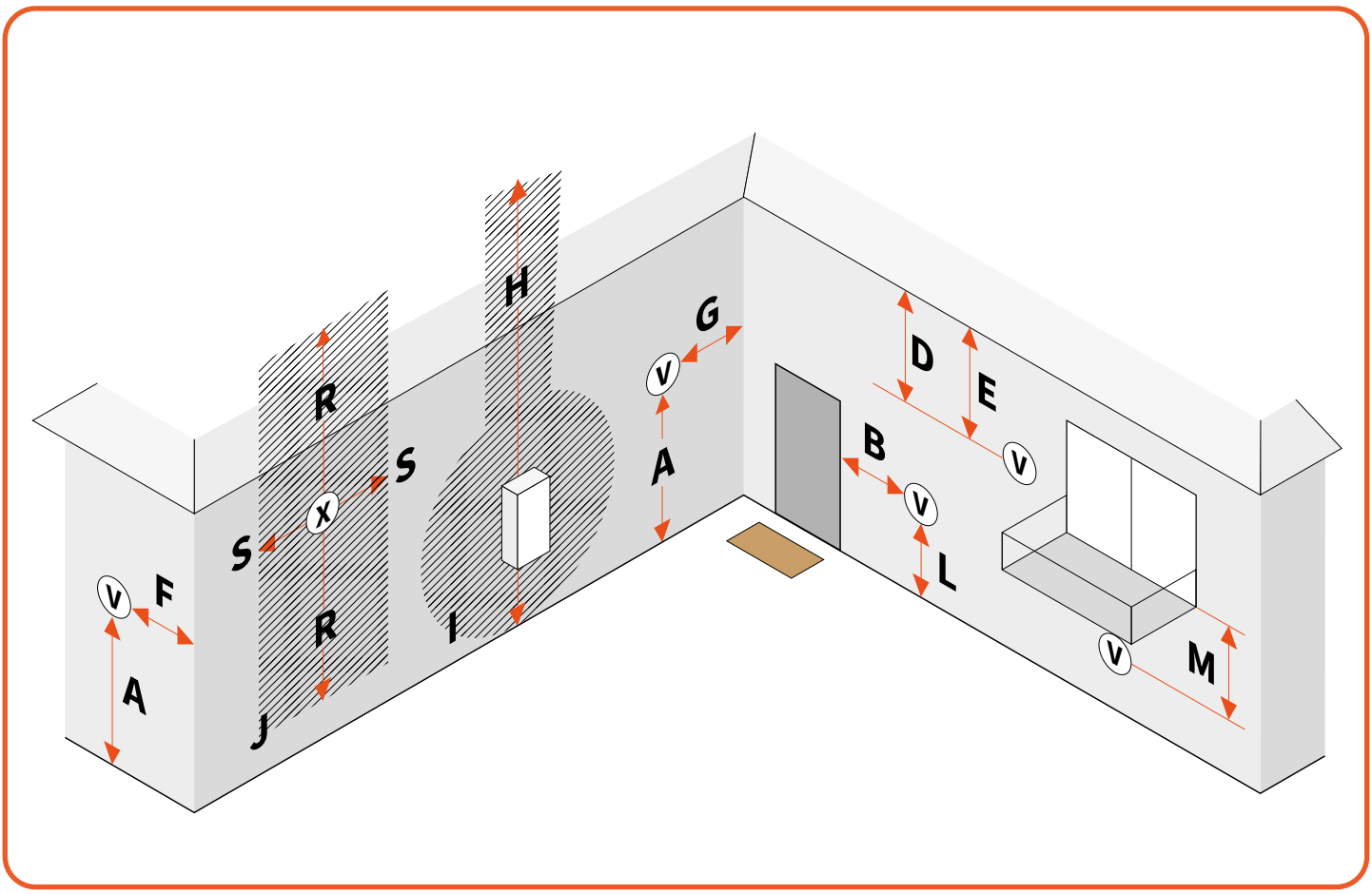

Figure 11.3 - horizontal vent termination I

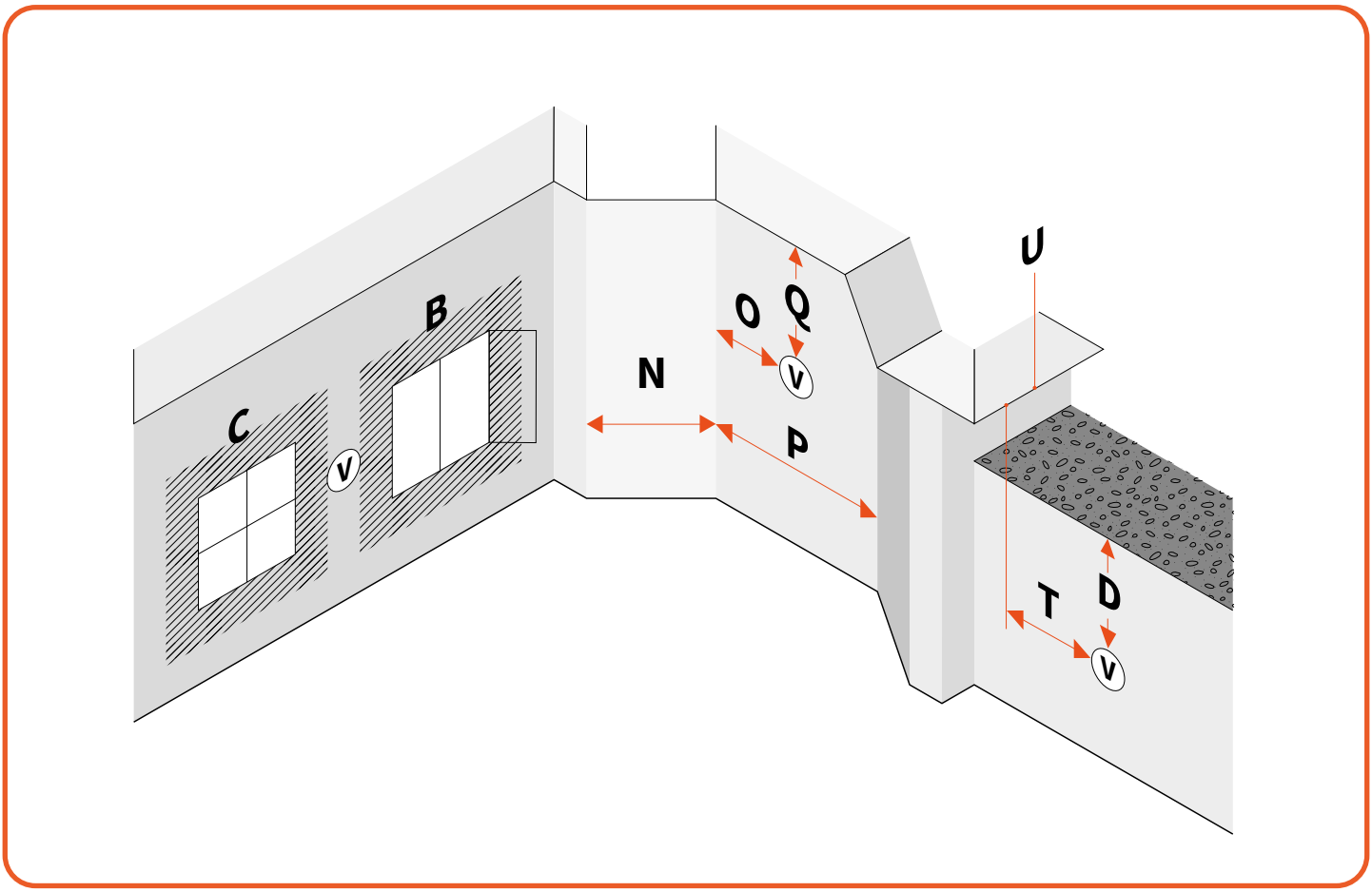

Figure 11.4 - Horizontal vent termination II

12 MAINTENANCE INSTRUCTION

This part of the manual focuses on the maintenance of your fireplace.

Please note It is recommended that you have the appliance inspected annually by a recognized installer, service agency or gas supplier to ensure safe use and a long service life.

TURN OFF THE GAS BEFORE SERVICING THE APPLIANCE.

12.1 Maintenance in the combustion chamber

During maintenance the glass windows of the fire need to be removed. To do this follow the following steps:

12.1.1 Disassembly of the safety screen

One of the safety features of the fireplace is the safety screen covering the windows. Any safety screen or guard that is removed for servicing must be replaced before operating the fireplace.

The safety screens are disassembled as by following the next steps

- Remove the safety screen(s) from their holders. The safety screens are held by magnets (***Figure 11.3***).
- Remove the lower magnet tabs from between the bottom trim and the front windows (***Figure 11.2*** and ***Figure 11.4***)
- Remove the upper magnet tabs from the back of the frame, so the are not in the way when removing the window.

To reassemble the safety screens reverse the steps. Make sure the lower tabs are secured properly between the window and trim.

Safety screens parts

	S tabs	U tabs	L tabs	F tabs	Long Screens	Short Screens
Summum 140 F	3	2	-		1	-
Summum 140 C	7	-	1		1	1
Summum 140 3S	9	-	2		1	2
Summum 140 T	6	4	-		2	-
Summum 140 RD	10	-	-	1	2	1
Summum 140 4S	10	-	-	2	2	2

Table 12.1

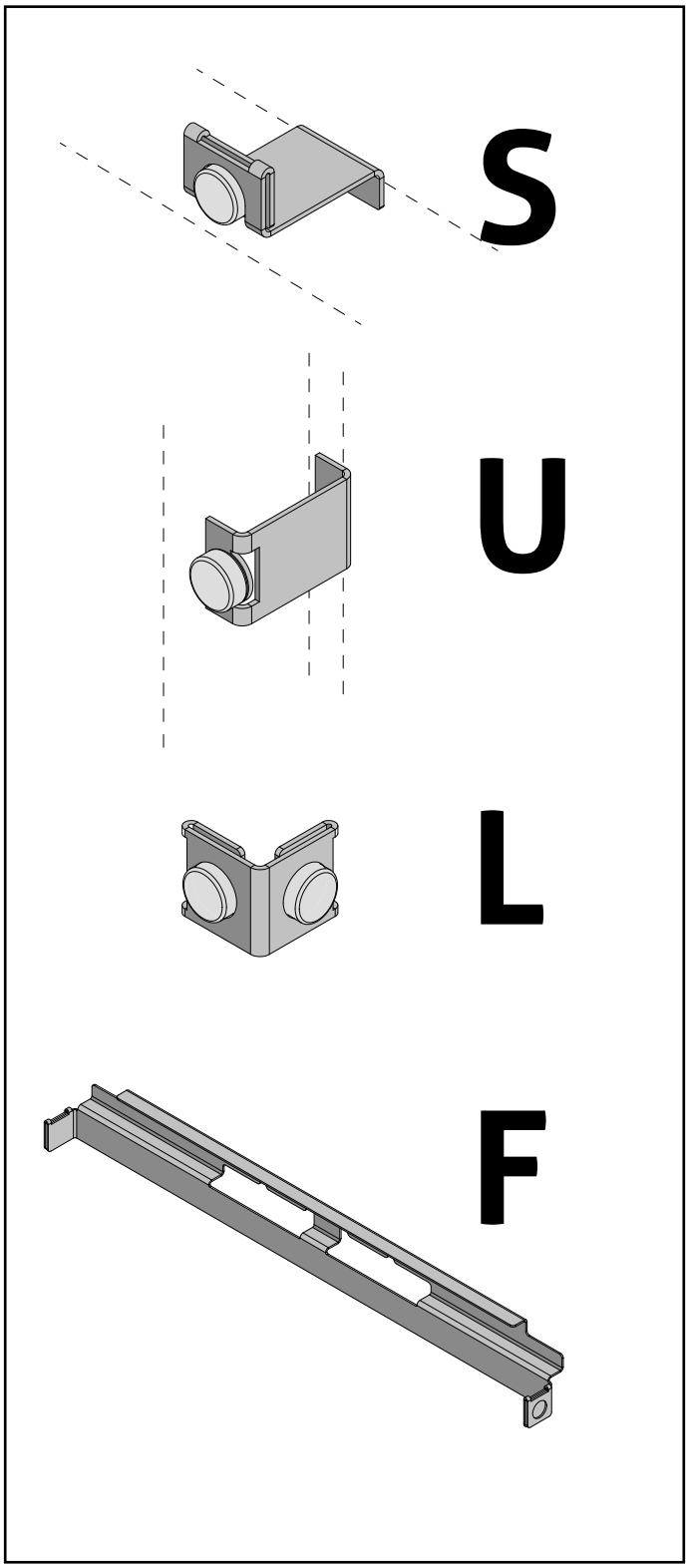

Figure 12.1 - S, U, L and F tabs

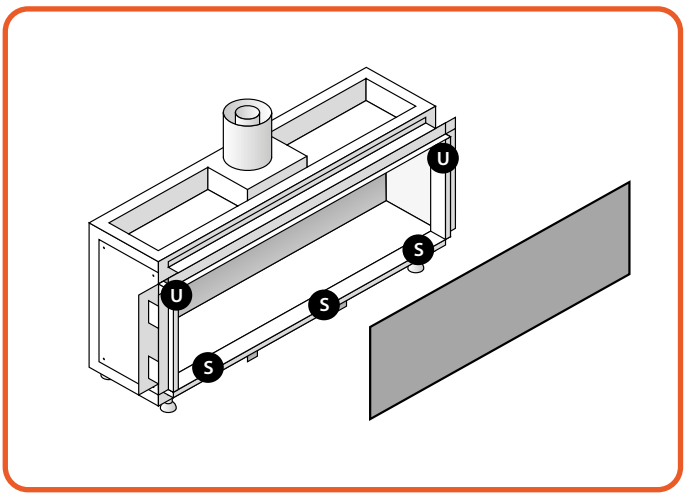

Figure 12.2 - Summum 140 F - location of tabs

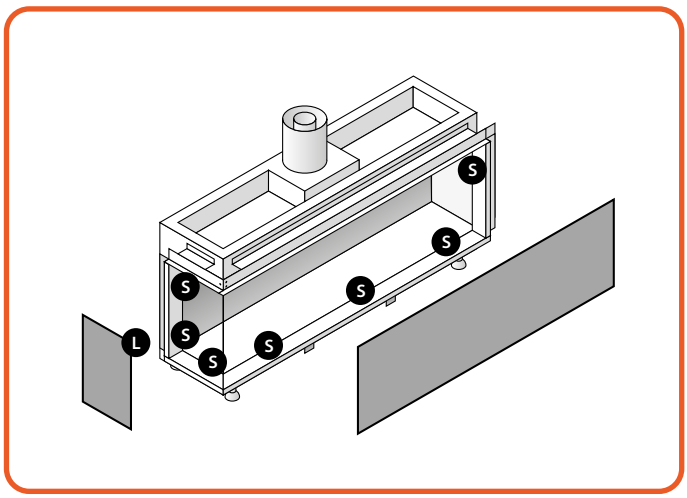

Figure 12.3 - Summum 140 CL - location of tabs

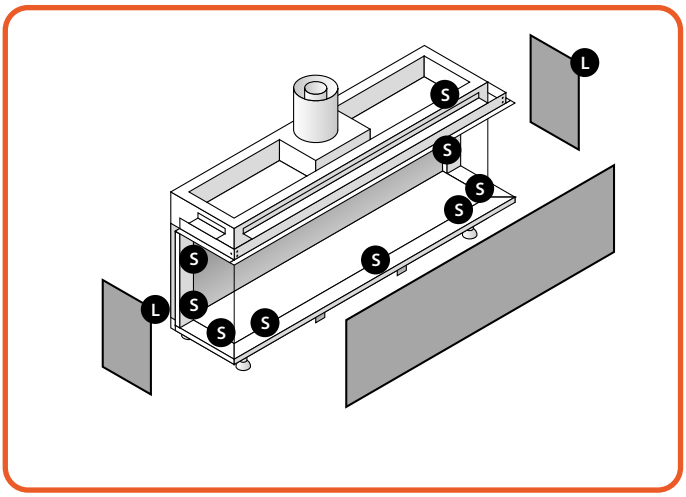

Figure 12.4 - Summum 140 3S - location of tabs

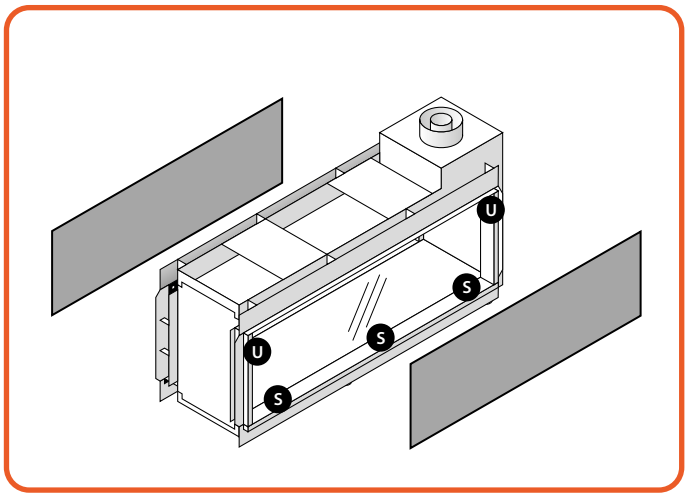

Figure 12.5 - Summum 140 T - location of tabs

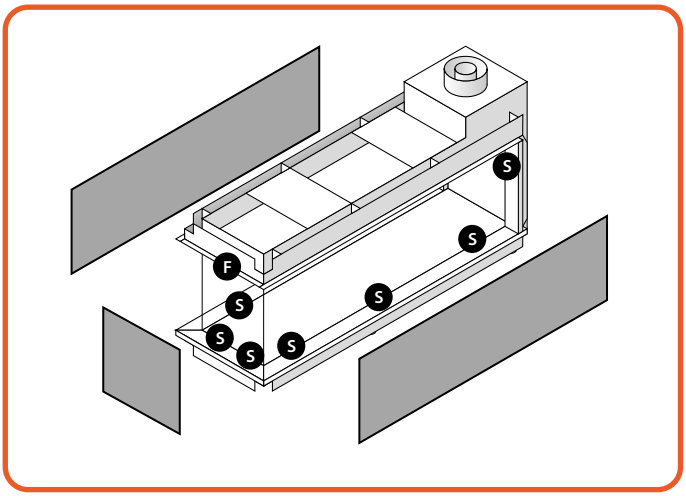

Figure 12.6 - Summum 140 RD - location of tabs

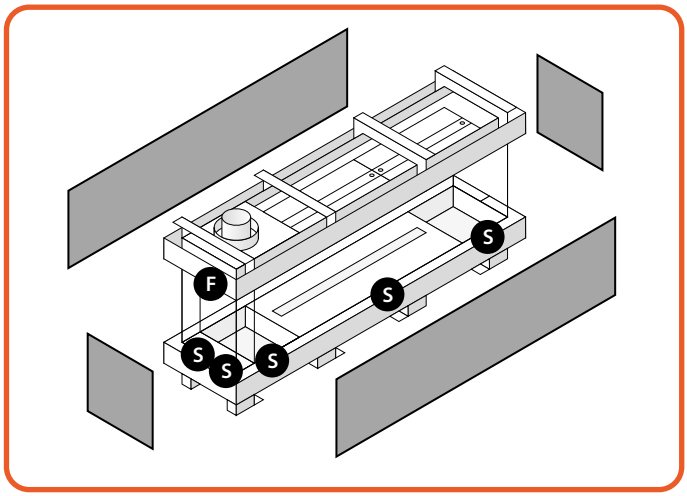

Figure 12.7 - Summum 140 4S - location of tabs

12.1.2 (Dis)assembly of the trims

For a tight finish of the fireplace, trims are provided. During maintenance these trims must be removed, before the glass can be removed. Please follow these steps:

Disassemble

- Remove both the side trims and bottom trim. They are held by magnets, ***Figure 10.8 - Figure 10.12***

Assembly:

- Put the trims back in reversed order.

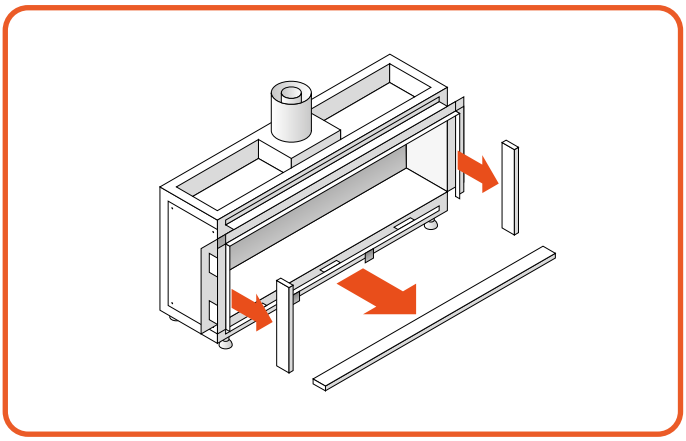

Figure 12.8 - Summum 140 F & T - Remove trims

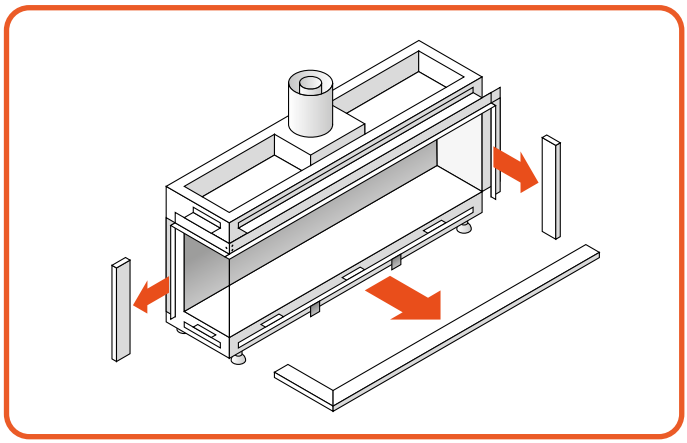

Figure 12.9 - Summum 140 C - Remove trims

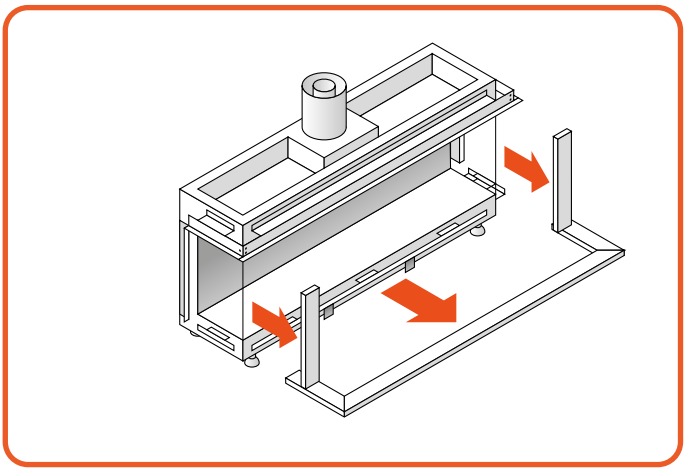

Figure 12.10 - Summum 140 3S - Remove trims

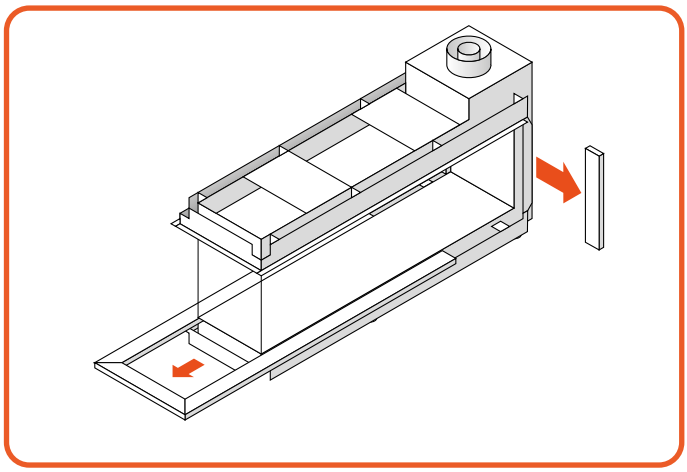

Figure 12.11 - Summum 140 RD - Remove trims

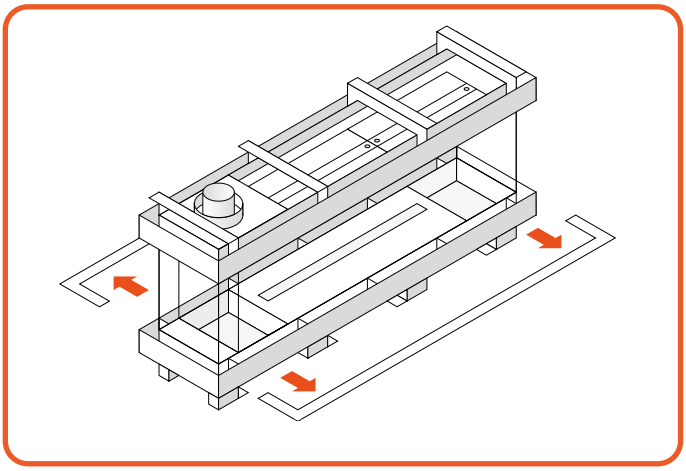

Figure 12.12 - Summum 140 4S - Remove trims

12.1.3 Remove glass

To be able to clean the glass on the inside, one needs to remove the glass.

Warning

The glass must be handled by a qualified person. As a safety precaution gloves should be worn when removing the glass.

To remove the glass follow these steps:

- Check, whether the trims are removed in as in **Chapter 10.1.2**.
- Put the suction cup on the glass and make sure it is properly vaccuumed, so it will not come off. Use two suction cups for the large front glass. (See ***Figure 10.12***)
- Loosen the glass clamps at the top and bottom side.
- Carefully lift the glass out of the lower glass rail and tilt it out through the opening, as seen in ***Figure 10.13***.

Note: Put the glass in a safe place when it is not in use to ensure it doesn't get damaged during maintenance. Detach the suction cup after removal to avoid leaving a mark on the glass.

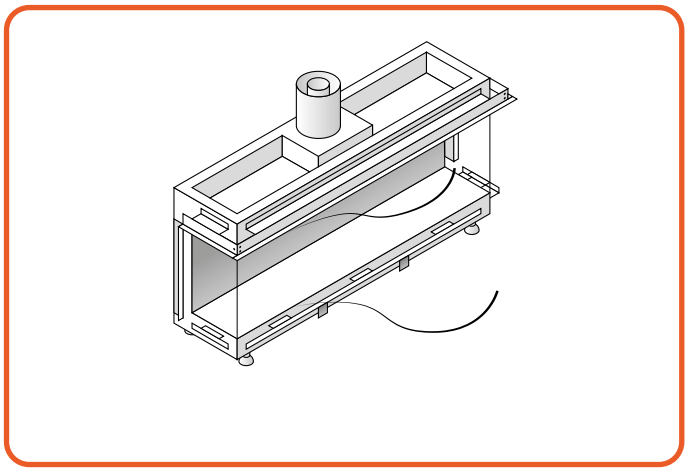

Figure 12.13 - Remove glass cords

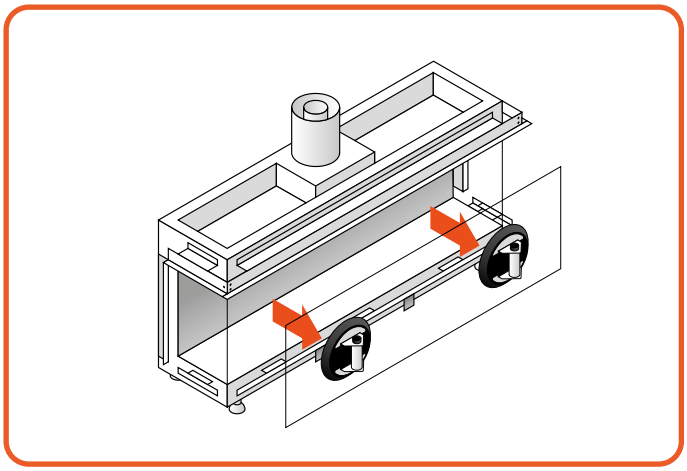

Figure 12.14 - Use two suction to remove large glass panel

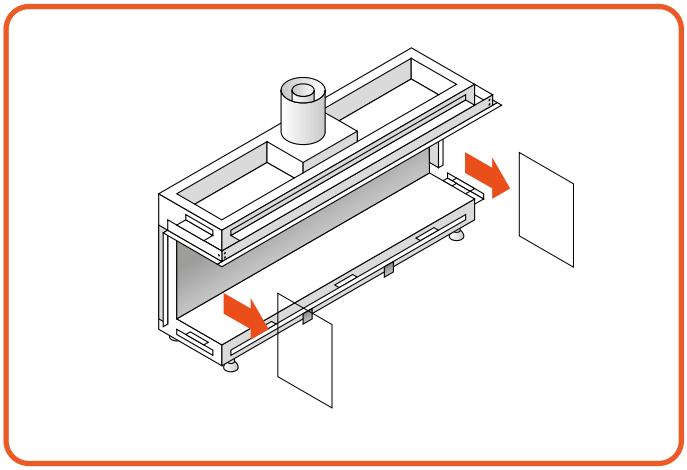

Figure 12.15 - Remove small side panels (if necessary)

12.2 Glass Maintenance

12.2.1 Ceramic glass

Burning natural gas (NG) or propane (LP) in this fireplace will always result in some of the gas components being deposited on the glass. Hydrogen sulfides and mercaptans, which are present in the burning gas, condense onto the relatively cooler glass surface and cause white film to build up over time.

The amount of this white film is influenced by a number of factors such as;

- the configuration of the system venting
- thermal efficiency of the fireplace design
- the humidity of combustion air
- frequency of fireplace use
- burner performance
- the fireplace design itself.

Do not use normal (usually ammonia-based) household glass cleaners to clean the glass as these cleaners can leave a permanent stain. Only a gas fireplace glass cleaner should be used. The following products are recommended and proven suitable for use:

Brand	Product
Forrest Technical Coatings	Stove Bright® Gas Appliance Glass Cleaner
Imperial Manufacturing Group	Imperial Gas Fireplace Glass Cleaner
A.W. Perkins Co.	GFC™ Gas Fireplace Glass Cleaner

The fireplace glass should be cleaned before the fireplace is first lit and then after the fireplace has been through its four hour burn-in cycle. This will reduce potential build up on your glass.

Keep in mind the following instructions when cleaning glass:

- Always clean the glass at room temperature. Do not clean the glass when it is hot!
- Use cleaning supplies qualified by Element4 or the product stated above.
- When you clean your Anti-Reflective glass (see the next section), make sure you use this with the special Element4 cleaner, which is available only via Element4.
- Use only a microfibre cloth. Other materials such as kitchen towels, steel wool etcetera can cause scratches or damage the coating on the glass.
- Should there occur stains on the glass, remove them regularly, for they can burn the glass.
- If the glass becomes coated with deposits which cannot be removed the glass must be replaced.

12.2.2 Anti-Reflective glass (Additional rules for)

Anti-reflective glass for the gas fireplaces consists of polished ceramic glass on which metal oxide coating layers have been applied. The thickness of the coating is checked down to the nanometer to perfectly control the reflection level. The reflectance level of untreated glass is on average 8%, while an anti-reflective glass provides a reflection of only 0.7%. Thanks to the new coating technology, anti-reflective glass is completely invisible when approached straight ahead. This gives the gas fireplace a super realistic fireplace effect. In this way you use all the advantages of a gas fire, while the atmosphere and warmth nevertheless match the fireplace.

For anti-reflective windows it is of great importance to observe certain maintenance instructions. In order not to damage the coating layers, the use of hard (sanding) sponges, abrasives and cleaning agents with ammonia is prohibited. Only use a neutral cleaning product (neither acidic nor alkaline), such as Element4 window cleaner (Item No. 4500926). The cleaning agents that you normally use should therefore not be used with an anti-reflective glass. Use a soft cloth or sponge (not paper).

Just as with ordinary ceramic glass, the white haze that results from the first combustion must be removed with anti-reflective glass. After that, sporadic maintenance is sufficient. Always rub the window completely dry. Residual water can stain the coating. Fingerprints are more visible on anti-reflective glass, therefore wear (rubber) gloves when grasping the window. If the window is lifted with a suction cup, the rubber of the suction cup must be dry to avoid damage to the coating.

12.2.3 Optional black glass installation

As an option for the fires of Element4, a black glass interior is available. To install these glass panels follow the next steps:

1. Remove fireplace trim and exterior glass following instructions shown previously in the manual.
2. Remove fire media from hearth tray so as it is not in the way.
3. Using provided suction cups, remove side panels from unit by lifting up and then swinging out the bottom of the panel first then once it is cleared from the bottom channel it should slide out enough to remove it. If you have a Sky Front the same step is for the back panel of the unit.
4. Replace the removed panels with the black glass panels by inserting the top of the panel in the channel first and then rotating the panel upright to bring the bottom of the panel into the bottom channel. Do this with both side panels and then the back panel if you have a Sky Front unit.
5. Replace the fire media on the hearth tray
6. Replace the glass and fireplace trim.

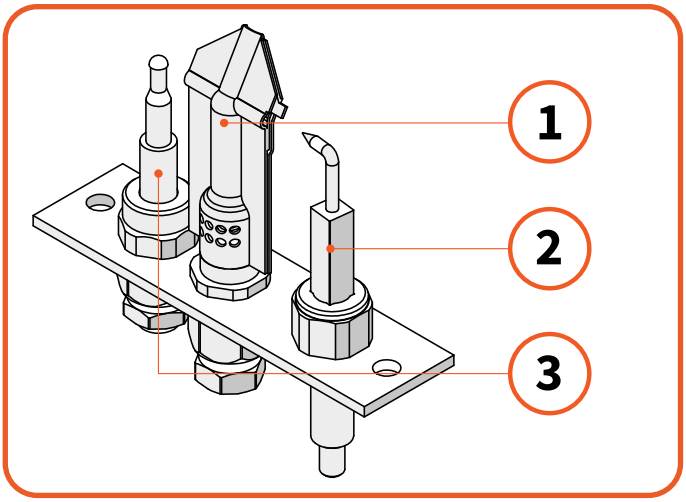

Figure 12.16 - Isometric drawing of the pilot set

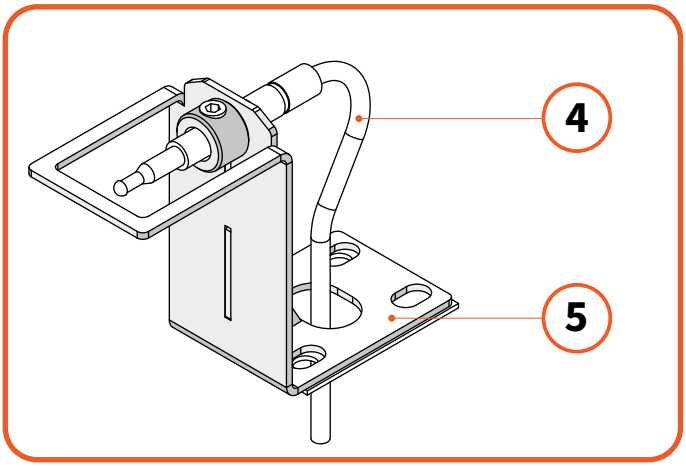

Figure 12.17 - Isometric drawing of second thermocouple

12.3 Burner Maintenance

For the maintenance of the burner different parts can be distinguished, all mentioned below. See ***Figure 11.14*** and ***Figure 11.15*** and ***Table 11.2*** for more info.

#	Part
1	Pilot flame
2	Ignitor Rod
3	Primary Thermocouple
4	Second Thermocouple
5	Thermocouple mount

Table 12.2

12.3.1 Burners

The flames from the burners should be visually checked. The flame should have a small blue base and be bright yellow. Too orange flames indicate too little oxygen. Flames that are too blue have too much oxygen. The oxygen in the primary air can be adjusted slightly at the venturi throttles, but this should not be necessary.

Maintenance of the burner should also be unnecessary. If this is the case, check the burner pressure at the inlet to the burner. The instructions of changing the burner pressure and the correct pressure per gastype can be found in **CHAPTER 13.1.**

12.3.2 Pilot

The pilot flame must be visually checked. The pilot flame must always be present when the appliance is in operation and should appear as shown in ***Figure 11.14.***

The pilot has two distinct flames, one engulfing the thermocouple on its left, the other reaching across to the burner.

The area around the pilot should be inspected for cleanliness. Lint or foreign material must be removed with a brush or vacuum.

12.3.3 Thermocouples

The Element4 fireplaces have two thermocouples; one next to the pilot and one opposite the pilot side of the burner. The completeness and operation of both must be checked. A qualified installer must confirm that both thermocouples are in place and undamaged. While checking the pilot set, please ensure that the ignitor rod is not cracked as well.

13 INSTALLING THE FIRE MEDIA

This appliance is equipped with a ceramic fire bed with heat resistant ceramic fibers. Excessive exposure to this material may cause irritation to the eyes, skin and respitory tract. It is therefore recommended that the dust emission is reduced as much as possible when handling these materials.

Only the decorative media supplied with this appliance are to be used. The ceramics must be laid only as shown in this chapter. Replacement parts are available from your dealer, but should only be installed by a qualified installation engineer.

Position the decoration media as shown on the images in this chapter.

Make sure that the pilot flame area and the second thermocouple are always free of any decorative material to make certain that the fire will ignite without problems.

Not doing so may cause a delayed ignition!

Figure 13.1 - Log set for the Summum 140

13.1 Log set for Summum 140 4S

The Summum 140 4S has additional log added to the standard log set. This log is cut in half and is placed on either side of the baffle glass as show in figure 11.1

Figure 13.1 - Additional log for the Summum 140 4S

14 TECHNICAL DATA

This product was tested and listed to ANSI Z21.11.50a-2008 and CSA2.22a-2008 “Vented Gas Fireplaces” by Intertek Group (***Figure 13.1***).

A sample listing label image is shown above. A metal listing label is attached to every Element4 fireplace and contains important certification information e.g. it specifies for which type of gas, gas pressure and for which country this appliance is intended. The nameplate is attached to a chain.

The listing label must not be removed from the fireplace.

Note: Check whether the appliance is suitable for the gas type and gas pressure on site.

14.1 Gas specifications

Model		Summum 140 - all versions -	
Gas		**Natural Gas**	**Propane**
Input Maximum	Btu/hr	81,341	80,544
Input Minimum	Btu/hr	20,463	19,955
Inlet Pressure	in. w.c.	7	11
	kpa	1.74	2.73
Manifold Pressure	in. w.c.	6	10,5
	kpa	1.49	2,61
Main Burner Injector Size		log: 360 (x2) log: 280 (x2) main: 360 (x1)	log: 120 (x4) main: 120 (x1)
Pilot Injector Size		32.2	27.1
New Efficiency		90%	

14.2 Electric Specification

AC ADAPTER SPECIFICATIONS

Input Voltage	120V AC
Input Power	9 W
Output Voltage	6V DC
Output Current	500 mA
Size	3.1”H x 2”W x 1.7”D
Output Cord Length	6 Feet
Agency Approvals	UL, CSA

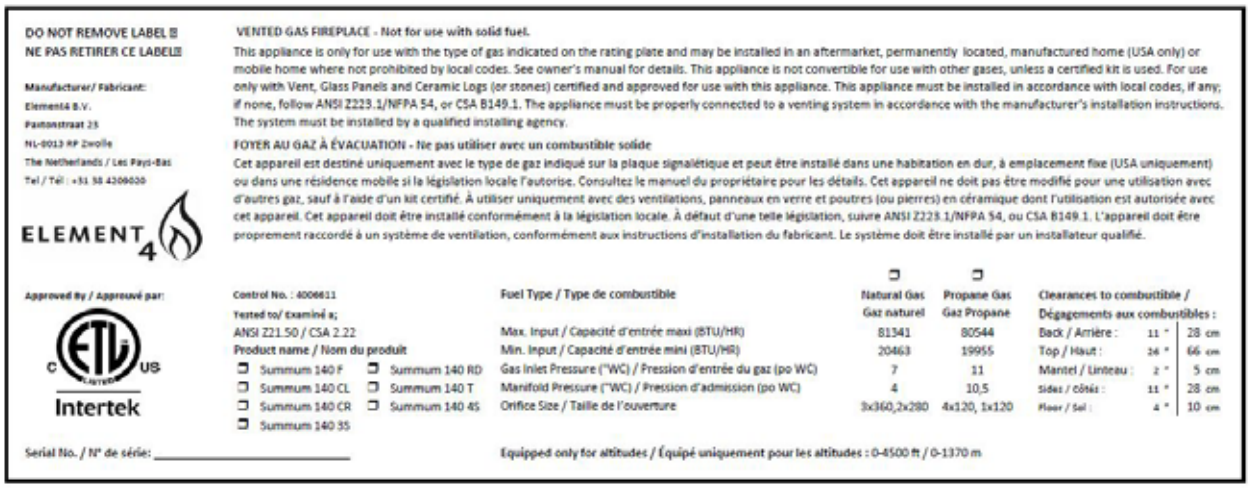
DO NOT REMOVE LABEL
NE PAS RETIRER CE LABEL

Manufacturer/ Fabricant:
Element4 B.V.
Pannonstraat 25
NL-8013 RP Zwolle
The Netherlands / Les Pays-Bas
Tel / Tél : +31 38 4206030

ELEMENT 4

VENTED GAS FIREPLACE - Not for use with solid fuel.
This appliance is only for use with the type of gas indicated on the rating plate and may be installed in an aftermarket, permanently located, manufactured home (USA only) or mobile home where not prohibited by local codes. See owner's manual for details. This appliance is not convertible for use with other gases, unless a certified kit is used. For use only with Vent, Glass Panels and Ceramic Logs (or stones) certified and approved for use with this appliance. This appliance must be installed in accordance with local codes, if any; if none, follow ANSI Z223.1/NFPA 54, or CSA B149.1. The appliance must be properly connected to a venting system in accordance with the manufacturer's installation instructions. The system must be installed by a qualified installing agency.

FOYER AU GAZ À ÉVACUATION - Ne pas utiliser avec un combustible solide
Cet appareil est destiné uniquement avec le type de gaz indiqué sur la plaque signalétique et peut être installé dans une habitation en dur, à emplacement fixe (USA uniquement) ou dans une résidence mobile si la législation locale l'autorise. Consultez le manuel du propriétaire pour les détails. Cet appareil ne doit pas être modifié pour une utilisation avec d'autres gaz, sauf à l'aide d'un kit certifié. À utiliser uniquement avec des ventilations, panneaux en verre et poutres (ou pierres) en céramique dont l'utilisation est autorisée avec cet appareil. Cet appareil doit être installé conformément à la législation locale. À défaut d'une telle législation, suivre ANSI Z223.1/NFPA 54, ou CSA B149.1. L'appareil doit être proprement raccordé à un système de ventilation, conformément aux instructions d'installation du fabricant. Le système doit être installé par un installateur qualifié.

Approved By / Approuvé par:
Intertek

Control No. : 4006611
Tested to/ Examiné à;
ANSI Z21.50 / CSA 2.22
Product name / Nom du produit
- Summum 140 F
- Summum 140 CL
- Summum 140 CR
- Summum 140 35
- Summum 140 RD
- Summum 140 T
- Summum 140 4S

Fuel Type / Type de combustible	Natural Gas / Gaz naturel	Propane Gas / Gaz Propane
Max. Input / Capacité d'entrée maxi (BTU/HR)	81341	80544
Min. Input / Capacité d'entrée mini (BTU/HR)	20463	19955
Gas Inlet Pressure (“WC) / Pression d'entrée du gaz (po WC)	7	11
Manifold Pressure (“WC) / Pression d'admission (po WC)	4	10,5
Orifice Size / Taille de l'ouverture	3x360,2x280	4x120, 1x120

Clearances to combustible / Dégagements aux combustibles :		
Back / Arrière :	11 “	28 cm
Top / Haut :	26 “	66 cm
Mantel / Linteau :	2 “	5 cm
Sides / Côtés :	11 “	28 cm
Floor / Sol :	4 “	10 cm

Serial No. / N° de série: _____

Equipped only for altitudes / Équipé uniquement pour les altitudes : 0-4500 ft / 0-1370 m

Figure 14.1 - Example of the data plate

15 OPERATING THE FIREPLACE

15.1 Before the first fire

1. Make certain that all construction materials have been removed from inside and around the fireplace and the fireplace has been cleaned of any construction dust. Clean the glass BEFORE and AFTER the first fire.
2. Confirm that the gas valve is properly connected and bled by a certified gas technician or plumber.
3. Check the gas supply for leaks and proper pressure. Refer to the table in "Appliance Ratings" section.
4. Check that the venting is unobstructed and in proper working condition.
5. Clean the glass panels on both sides.
6. Properly place, clamp and seal the glass panels.
7. Ensure the receiver is powered with an AC Adapter OR Batteries, but not both!

Place the two (2) AAA batteries into the remote control and confirm that it will communicate with the receiver by pressing the ON/OFF button. Pair the remote and receiver (see **CHAPTER 4.1.1**).

15.2 The first fire

When the fireplace is first heated, an odor may be given off by the hot metal. This is normal and is a result of the 'burn off' of the lubricants and sealants used when manufacturing the fireplace.

It is recommended that you open the nearby windows for extra ventilation and then operate the fireplace for at least four hours.

Because a fireplace is a heat source, natural convection will occur around it. Solid particles in the circulating air may burn and settle down on cold surfaces, causing discoloration. Discoloration is an annoying problem and it is difficult to solve.

These particles can come from construction moisture or cigarette smoke, but also they might be volatile components in paint, construction materials or carpeting. For newly constructed chimneys or after a big reconstruction, it is advised to wait a minimum of six weeks before firing a fireplace. After this burn-off period, turn off the fireplace and let it cool completely to room temperature and once again clean both sides of the glass and the interior panels as described in **CHAPTER 11.2**.

When the glass is cold, some condensation may appear on the glass after lighting the fireplace. This is normal and the condensation will disappear as the glass warms.

To ensure as little condensation as possible, the fireplace will start on just the main burner. During the first minute of firing this will ensure your fireplace to evaporate the condensation on the glass and heat up the air in the combustion chamber.

Please note During the first minute of firing i.e. the initial start up sequence of lighting the pilot flame and the first 30 seconds until the second thermocouple has given its clear, it is not possible to use the 'double plus'-button to switch between burners.

During this first fire, examine the flame for appearance and quality. Examine the burner media for sooting. Flames may appear blue and will turn yellow after 15 to 20 minutes.

Since it is a metal fireplace, the heat-up and cool-down cycles may produce some noises caused by the expansion and contraction of these metals. The premium materials and build quality of your fireplace will keep these sounds to a minimum.

15.3 The first fire - testing

As a continuation of the previous chapter, prior to being placed into (daily) operation, the fireplace should be test-fired in stages to ensure that all components are in good working order.

This fireplace has a 2nd thermocouple which senses the burner flame. The system will turn itself off if the system does not sense the 2nd thermocouple output within 29 seconds after the valve opens.

If 2nd thermocouple is still hot enough to produce electricity at the receiver thus preventing the fireplace from starting, the remote will flash "OFF" to signal this safety lock out. Allow time for the 2nd thermocouple to cool down before attempting a start. The system is ready to start when the flashing "OFF" becomes solid on the remote and pressing the ON/OFF button produces a response from the valve.

1. Start the fireplace with the hearth panel out and with the front glass off. Ensure that the pilot flame both heats the primary thermocouple and lights the burner. For safety, a post-purge delay is built into the system. Subsequent start attempts MUST NOT take place for at least thirty (30) seconds.
2. Start the fireplace with the hearth panel in place and with all of the glass panels fixed correctly in place. Ensure that the main burner flames engulf the 2nd thermocouple and the fireplace stays lit for at least 1 full minute. If the system turns itself off after 29 seconds install the required media (next section) and return here. Installing the fire media will help with the flame around the 2nd thermocouple. Subsequent start attempts MUST NOT take place for at least five (5) minutes.
3. Start the fireplace with the media installed. If the system turns itself off after 29 seconds, rearrange the media to produce a good flame at the 2nd thermocouple. This step may have to be repeated several times before the media is in the best place for consistent operation. A single, long beep indicates that the 2nd thermocouple is still too hot to start the ignition sequence. Allow time for the 2nd thermocouple to cool down. Once the system stays lit for at least one full minute, turn the fireplace off, fix the glass panels in place and operate the fireplace for at least 45 minutes to ensure the system works properly when heated.

If the pilot is extinguished either intentionally or unintentionally no attempt should be made to re-light the gas until at least 3 minutes have elapsed.

A MASSACHUSETTS CERTIFICATION

This appliance is approved for installation in the Commonwealth of Massachusetts. The Board of State Examiners of Plumbers and
Gas Fitters has issued approval number Element4 for this appliance.

THE FOLLOWING MUST BE OBSERVED WHEN INSTALLING THE ELEMENT4 FIREPLACES WITHIN THE COMMONWEALTH OF MASSACHUSETTS:

(a) For all side wall horizontally vented gas fueled equipment installed in every dwelling, building or structure used in whole or in part for residential purposes, including those owned or operated by the Commonwealth and where the side wall exhaust
vent termination is less than seven (7) feet above finished grade in the area of the venting, including but not limited to decks and porches, the following requirements shall be satisfied:
1. INSTALLATION OF CARBON MONOXIDE DETECTORS. At the time of installation of the side wall horizontal vented gas
fueled equipment, the installing plumber or gasfitter shall observe that a hard wired carbon monoxide detector with an alarm
and battery back-up is installed on the floor level where the gas equipment is to be installed. In addition, the installing plumber or gasfitter shall observe that a battery operated or hard wired carbon monoxide detector with an alarm is installed on each additional level of the dwelling, building or structure served by the side wall horizontal vented gas fueled equipment. It shall be the responsibility of the property owner to secure the services of qualified licensed professionals for the installation of hard wired carbon monoxide detectors
a. In the event that the side wall horizontally vented gas fueled equipment is installed in a crawl space or an attic,
the hard wired carbon monoxide detector with alarm and battery back-up may be installed on the next adjacent floor level.
b. In the event that the requirements of this subdivision can not be met at the time of completion of installation, the
owner shall have a period of thirty (30) days to comply with the above requirements; provided, however, that during said
thirty (30) day period, a battery operated carbon monoxide detector with an alarm shall be installed.
2. APPROVED CARBON MONOXIDE DETECTORS. Each carbon monoxide detector as required in accordance with the above provisions shall comply with NFPA 720 and be ANSI/UL 2034 listed and IAS certified.
3. SIGNAGE. A metal or plastic identification plate shall be permanently mounted to the exterior of the building at a minimum height of eight (8) feet above grade directly in line with the exhaust vent terminal for the horizontally vented gas fueled heating appliance or equipment. The sign shall read, in print size no less than one-half (1/2) inch in size, "GAS VENT DIRECTLY BELOW. KEEP CLEAR OF ALL OBSTRUCTIONS".
4. INSPECTION. The state or local gas inspector of the side wall horizontally vented gas fueled equipment shall not approve
the installation unless, upon inspection, the inspector observes carbon monoxide detectors and signage installed in accordance with the provisions of 248 CMR 5.08(2)(a)1 through 4.
(b) EXEMPTIONS: The following equipment is exempt from 248 CMR 5.08(2)(a)1 through 4:
1. The equipment listed in Chapter 10 entitled "Equipment Not Required To Be Vented" in the most current edition of
NFPA 54 as adopted by the Board; and
2. Product Approved side wall horizontally vented gas fueled equipment installed in a room or structure separate from
the dwelling, building or structure used in whole or in part for residential purposes.
(c) MANUFACTURER REQUIREMENTS - GAS EQUIPMENT VENTING SYSTEM PROVIDED. When the manufacturer of Product Approved side wall horizontally vented gas equipment provides a venting system design or venting system components with the equipment, the instructions provided by the manufacturer for installation of the equipment and the venting system shall include:
1. Detailed instructions for the installation of the venting system design or the venting system components; and
2. A complete parts list for the venting system design or venting system.
(d) MANUFACTURER REQUIREMENTS - GAS EQUIPMENT VENTING SYSTEM NOT PROVIDED. When the manufacturer of a Product Approved side wall horizontally vented gas fueled equipment does not provide the parts for venting the flue gases, but
identifies "special venting systems", the following requirements shall be satisfied by the manufacturer:
1. The referenced "special venting system" instructions shall be included with the appliance or equipment installation instructions; and
2. The "special venting systems" shall be Product Approved by the Board, and the instructions for that system shall
include a parts list and detailed installation instructions.
(e) A copy of all installation instructions for all Product Approved side wall horizontally vented gas fueled equipment, all
venting instructions, all parts lists for venting instructions, and/or all venting design instructions shall remain with the appliance or equipment at the completion of the installation.

B TROUBLESHOOTING FLOWCHART

	Function			Possible cause	Remedy
A	Press the ON button to start ignition sequence. Beep will occur each second.	No		Transmitter batteries low.	Replace transmitter batteries. Quality alkaline recommended.
				Receiver batteries low.	Test the batteries. replace if necessary. Quality 1.5V AA alkaline recommended. **Note:** Do NOT connect an AC adapter when using receiver batteries.
				Check that transmitter and receiver are synchronized.	Reset system, see the installation manual or the label on the receiver. One long beep indicates the wiring is incorrect or the code learning sequence has failed.
				Transmitter distance is limited.	Straighten the antenna.
					Replace the receiver.
				Defective AC adapter	Replace the AC adapter.
				Damaged wiring	Inspect/test all wiring and connections.
				2nd thermocouple is producing electricity.	Wait for 2nd thermocouple to cool down (3-5 minutes)
Yes					
B	Magnet unit is energized thus producing an obvious latching sound.	No	No beep	Impulse magnet not operating properly.	Replace gas valve.
		No	3 Short beep	Receiver batteries low.	Test the batteries, replace if necessary. Quality 1.5V AA alkaline recommended.
		No	1 long beep	8-wire cable is off or not operating properly.	Confirm proper operation of the 8-wire cable.
				SW-cable disconnected.	Confirm proper connection/operation of the SW-cable.
				Motor not operating properly.	Replace gas valve.
				Micro switch not operating properly.	Replace gas valve.
				2nd thermocouple not connected	Confirm integrity of 2nd thermocouple and connection.
Yes					
C	Spark will occur each second.	No		Ignition components not operating properly.	Check connection between ignition cable and ignitor rod.
					Check ignitor rod spark gap.
					Check ignitor rod.
					Check ignition cable for damage.
					Increase distance between ignition cable and all metal parts.
		No		Ignition sequence stops after one spark	Remove ground bolt (T20 Torx) and clean ground lug.
		No		Ignition sequence stops, no pilot flame. No reaction to remote control command.	Reset system, see the installation manual or the label on the receiver.
					Do not coil the ignition cable.
					Shorten the ignition cable, if possible.
		No		Ignition sequence stops, no pilot flame. Transmitter command is possible.	Test the batteries, replace if necessary. Quality 1.5V AA alkaline recommended.
Yes (Continued)					

Function		Possible cause	Remedy
Yes (Continued)			
D Pilot lit.	**No**	TC- and SW-cable reversed.	Check cable connection between receiver and interrupter block.
		Magnet unit not operating properly.	Replace gas valve.
		Short between interrupter and SW cable.	Check interrupter block connection.
		No gas (magnet unit drops after 30 second audible count.)	Check gas supply.
		Spark not lighting the pilot.	Check spark is crossing pilot orifice.
		Cracked ignitor rod (spark heard but not seen)	Ensure that ignitor rod does not move within ceramic shield. Check that ceramic shield or ignition wire is not defective.
Yes			
E Sparking stops after pilot is lit.	**No**	Short between interrupter block and TC-cable.	Check connection to interrupter block.
		Electronic measuring amplifier defective.	Replace the receiver.
Yes			
F Motor turns to main gas and pilot stays lit.	**No** Magnet unit drop (audible sound)	Resistance in thermocouple circuit too high.	Check thermocouple circuit.
		Not enough heat on thermocouple.	• Check position of pilot to thermocouple. • Check the stability and intensity of pilot flame. • Ensure the proper restrictor is installed. • Ensure that the pilot flame is properly adjusted. Possible cold start. Wait one minute and retry.
		Low voltage from thermocouple.	Replace thermocouple. Do not over tighten - hand tight plus 1/4 turn maximum.
		No gas (magnet unit drops after 30 second audible count.)	Check gas supply.
	No	Broken receiver	Ensure powered/unpowered receiver allows manual operation.
	No	Ignition sequence stops. No reaction to remote control command.	Reset system, see the installation manual or the label on the receiver.
			Do not coil the ignition cable.
		"140" models ONLY: Pilot flame under hearth panel not establishing.	Remove glass and hearth panel then check for proper pilot operation. If pilot establishes with panel off then install panel and glass and adjust pilot flame (hi/lo) for best operation.
Yes			

Function			Possible cause	Remedy
G Main burner is lit.	**No**		Manual knob is in the “MAN” position.	Turn the control knob to “ON” position, a positive latch is required.
	No		Pilot flame is too low.	Confirm correct gas pressure. Increase pilot flame if necessary.
Yes (Continued)				
H Main burner stays lit.	**No**	Systems drops out - all flames go out instantly	Too much draft at pilot flame (poor flame impingement of primary thermocouple.)	Check venting installation. Use restrictor as required.
			Pilot assembly out of order.	Inspect pilot assembly for correct operation and thermocouple impingement.
			5 day shut off.	The system shuts off the fire and pilot if there is no change in the flame height for 5 days.
	No	Main burner remains lit while flame are lowered	2nd thermocouple is not heated.	Ensure 2nd thermocouple is heated by a robust flame. The fireplace media may be interfering with proper flame. Check 2nd thermocouple wiring.
				Add 2nd ground wire from 2nd thermocouple to the grounding screw (trox) located on gas valve if not already attached.
			2nd thermocouple shut off.	The system shuts off the fire when the main burner flame is not sensed within 29 seconds of ignition or not sensed after pressing the large flame button. Note: If the system fails to light due to the 2nd thermocouple voltage not being sensed a two minute lockout period begins. This lockout time allows the gas to dissipate.
	No	System goes to pilot flame	6 hours of no motor movement.	In Manual/Temperature/Timer modes the valve turns down to pilot only if the flame height does not change for a 6 hour period. In Temperature/Timer modes if the ambient room temperature changes, the flame height will adjust automatically to maintain the set temperature and the fire will continue to function normally. The valve will turn to pilot flame if the set temperature and the ambient temperature remain the same over a 6 hour period.
Yes				
I Magnet unit drops while motor turns. Receiver makes 3 beeps.	**Yes**		Receiver batteries low.	Test the batteries, replace if necessary. Quality 1.5V AA alkaline recommended.
			Ensure magnet unit is operating normally.	Test the receiver output to the magnet unit.
No				
J Flames become thin, blue, wispy then go out.	**Yes**		Exhaust is contaminating the fresh air.	Inspect venting for damage and/or incorrect installation.
	Yes		Flow of fresh air and/or exhaust is blocked.	Ensure that vent configuration is within the vent chart requirements.
				Check termination for blockage and/or appropriate type.
	Yes		LP gas being used with NG orifice(s).	Ensure the gas type is correct for the installed orifices.
No (continued)				

Function		Possible cause	Remedy
No (Continued)			
K Flames are very yellow with dark, sooty tips.	**Yes**	The air shutter is closed when using LPG.	When using LPG the air shutter must be fully open. See conversion instructions.
		Flow of fresh air and/or exhaust is blocked.	Ensure that vent configuration is within the vent chart requirements.
			Check termination for blockage and/or appropriate type.
No			
L Flames are very busy and blowing in an abnormal direcition.	**Yes**	Air leak in the firebox.	Check unit for leaks at glass corners or at gaskets.
			Check unit for positive relief door seal.
			Check venting for complete integrity.
Yes			
M Flames are stable but too small and blue.	**Yes**	Too much primary air.	Reduce the primary air opening until flames have blue base and yellow upper two-thirds.
No			
Normal operation (?)		If the fireplace still is not functioning normally, contact your dealer.	

C ERRORS CODES PROCONTROL APP

C.1 Messages shown in app

Error code	Message in App	Description	Possible cause
F02	Contact Service.	• 5 sec. beep from Receiver • Fire is not responding; no ignition	• Microswitch not making contact with cam on motor knob • Motor wiring is incorrect • Reversed polarity or faulty Microswitch • Bent Motor Knob
F03	Contact Service.	• 5 sec. beep from Receiver • Ignition process is interrupted • Fire is not responding; no ignition	• Thermocouple wiring is incorrect • Thermocouple wiring is not connected • ON / OFF switch in O (OFF) position
F04	Ignition Sequence Malfunction. Wait 1 minute. Retry ignition.	• No pilot flame within 30 sec. • NOTE: After 3 failed ignition sequences F06 shown	• No gas supply • Air in pilot supply line • No spark • Reversed polarity in thermocouple wiring • Check for correct pilot orifice (LPG to NG or vice versa)
F05	Contact Service.	• Pilot burner fails to ignite or shuts off • Motor stays in pilot position	• Not enough thermo-voltage • Air in the pilot supply line • Low inlet pressure • Bad thermocouple
F06	Contact Service.	• 3 failed ignition sequences within 5 minutes • Fire is not responding; no pilot flame	• No gas supply • Air in pilot supply line • No spark • Reversed polarity in thermocouple wiring • Check for correct pilot orifice (LPG to NG or vice versa)
F07	Replace Handset Batteries.	• Battery icon flashes on handset display	• Low battery power in handset
F08	Contact Service.	• Low Receiver battery power supply • Short beeps for 3 sec. during motor turn	• Low Receiver battery power supply
F10	Contact Service.	• Pilot lit • Main burner fails to ignite and pilot shuts off • Ignition is blocked for 2 minutes	• 2nd thermocouple is out of position • 2nd thermocouple wiring is incorrect • Gas logs out of position • Gas ports for burner are blocked
F12	Contact Service.	• Motor turns to pilot position	• Receiver powered by batteries and Receiver temperature exceeds 60 °C • Check air circulation and heat shield
F13	Contact Service.	• Motor turns to pilot position • Fan at level 4 for 10 minutes (T > 80 °C)	• Receiver temperature exceeds 80°C • Check air circulation and heat shield
F14	Contact Service.	• 5 sec. beep from Receiver • Fire is not responding; no ignition	• Receiver software doesn't support a 2nd thermocouple • Wrong Receiver
F15	Contact Service.	• 5 sec. beep from Receiver • Fire is not responding; no ignition	• 2nd thermocouple wiring is incorrect • 2nd thermocouple wiring is not connected
F16	Handset out of range.	• No temperature shown in App	• Handset out of range for more than 1.5 h • Electrical interference
F17	Contact Service.	• Fire is not responding; no ignition	• Inlet voltage exceeds 7.25 V • Malfunction of Mains Adapter
F18	Contact Service.	• Switch panel / touch pad not functioning	• Switch panel / touch pad is locked • Short in cable or button
F19	Contact Service.	• Pilot drops when Motor opens main gas	• Insufficient thermo-voltage • Thermocouple malfunction • Low inlet gas pressure • Improper thermocouple flame impingement • Carbon build-up on thermocouple • Valve malfunction • Resistance in thermocurrent circuit
F26	Contact Service.	• It is not possible to increase flame height after ignition • Fan at level 4 for 10 minutes (T > 80 °C)	• Receiver powered by batteries and Receiver temperature exceeds 60°C • Receiver powered by mains power and Receiver temperature exceeds 80°C
F27	Contact Service.	• Fire is not responding • No electronic control of fire	• No handset or Wi-Fi Box connected to Receiver for more than 3 hours
F28	On-Demand Pilot	• Pilot shuts off after a predefined time	• Pilot shuts off after no motor movement for a predetermined time

Error code	Message in App	Description	Possible cause
F31	Contact Service.	• Fire is not responding • No electronic control of fire	• Receiver or Wi-Fi Box malfunction • Connection cable from Receiver to Wi-Fi Box defective
F41	Check Wi-Fi	• Fire is not responding • No electronic control of fire	• No Wi-Fi connection to myfire Wi-Fi Box, router and / or smart device Wi-Fi in smart device is deactivated
F42	Check Wi-Fi	• Fire is not responding • No electronic control of fire	• No power to router No Wi-Fi connection to router and / or smart device Smart device not in the correct home network
F43	No Receiver Connected. Contact Service.	• Fire is not responding • No electronic control of fire	• No communication between Receiver and myfire Wi-Fi Box
F44	Contact Service.	• No temperature shown in App • N.a. (not applicable) displayed in App	• Handset not within range Low battery power in handset
F49	Contact Service.	• No electronic control of fire	• Receiver software < 8.32 is not supported by myfire Wi-Fi Box Version 2
F50	Contact Service.	• No electronic control of fire	• Handset software < SW 231 is not supported by the myfire Wi-Fi Box Version 2

C.2 Messages shown in remote

Error code	App Message	Time	Description	Possible Cause
F04	F04	4 sec.	• No pilot flame within 30 sec. • NOTE: After 3 failed ignition sequences F06 shown	• No gas supply • Air in pilot supply line • No spark • Reversed polarity in thermocouple wiring
F06	F06	4 sec.	• 3 failed ignition sequences within 5 minutes • Fire is not responding; no pilot flame	• No gas supply • Air in pilot supply line • No spark • Reversed polarity in thermocouple wiring • Check for correct pilot orifice (LPG to NG or vice versa)
F07	F07	Until batteries replaced	• Battery icon flashes on handset display	• Low battery power in handset
F09	F09	4 sec.	• Fire is not responding • No electronic control of fire	• Down arrow button was not pressed during pairing • Receiver and handset are not synced
F46	F46	4 sec.	• Fire is not responding • Intermittent response • No electronic control of fire	• No or bad connection between receiver and handset • No power at Receiver (batteries low) • Mains adapter faulty, set not communicating with Receiver)

D DIMENSIONAL DRAWINGS

On this page and the following ones you will find dimensional drawings of the Sky RD series with some of the important dimensions that you have to take into account when installing and installing your fireplace.

DWG files for design specific dimensions not listed are available for download at **www.element4fires.com**

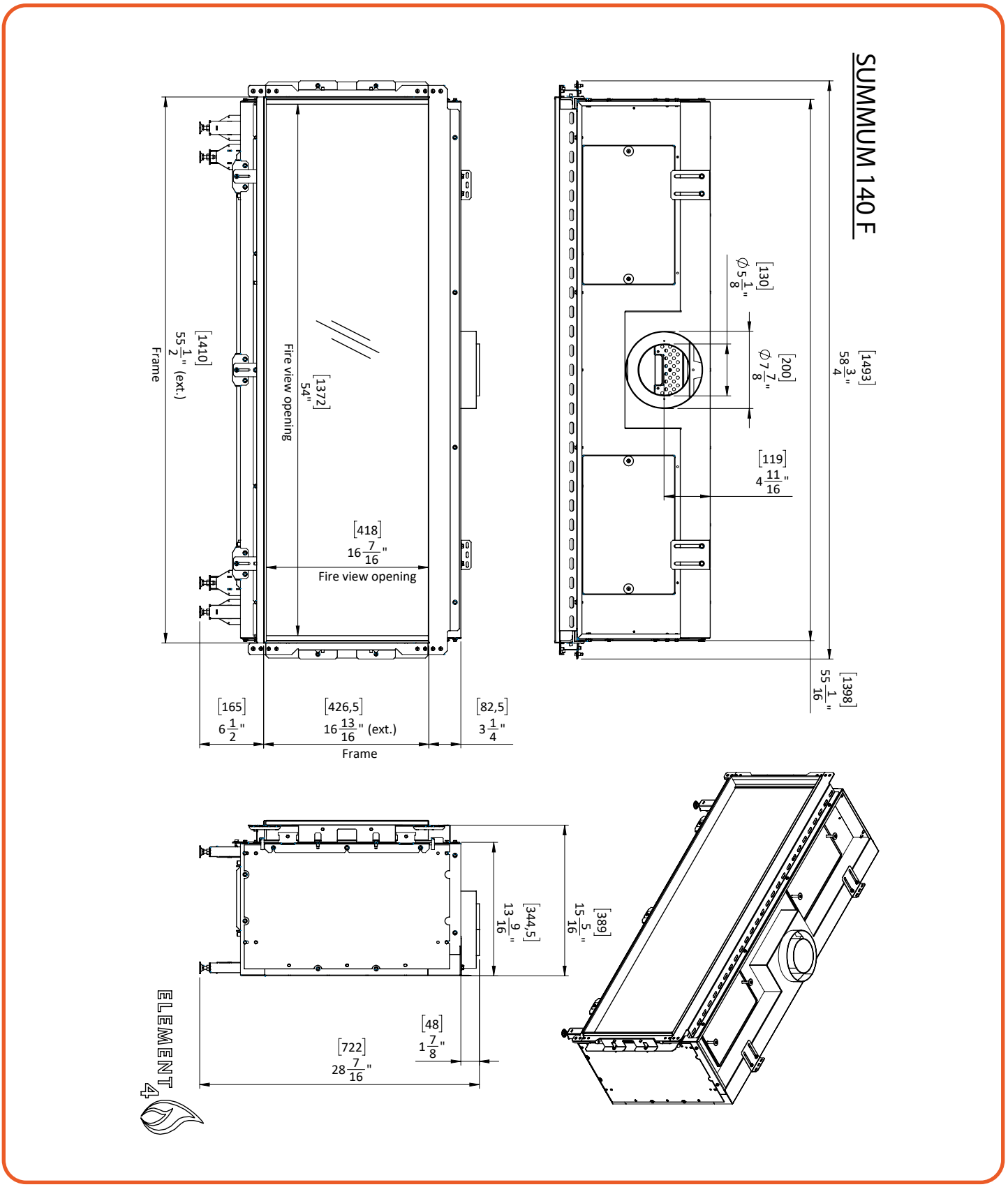

Figure D.A - Technical drawing of Summum 140 F

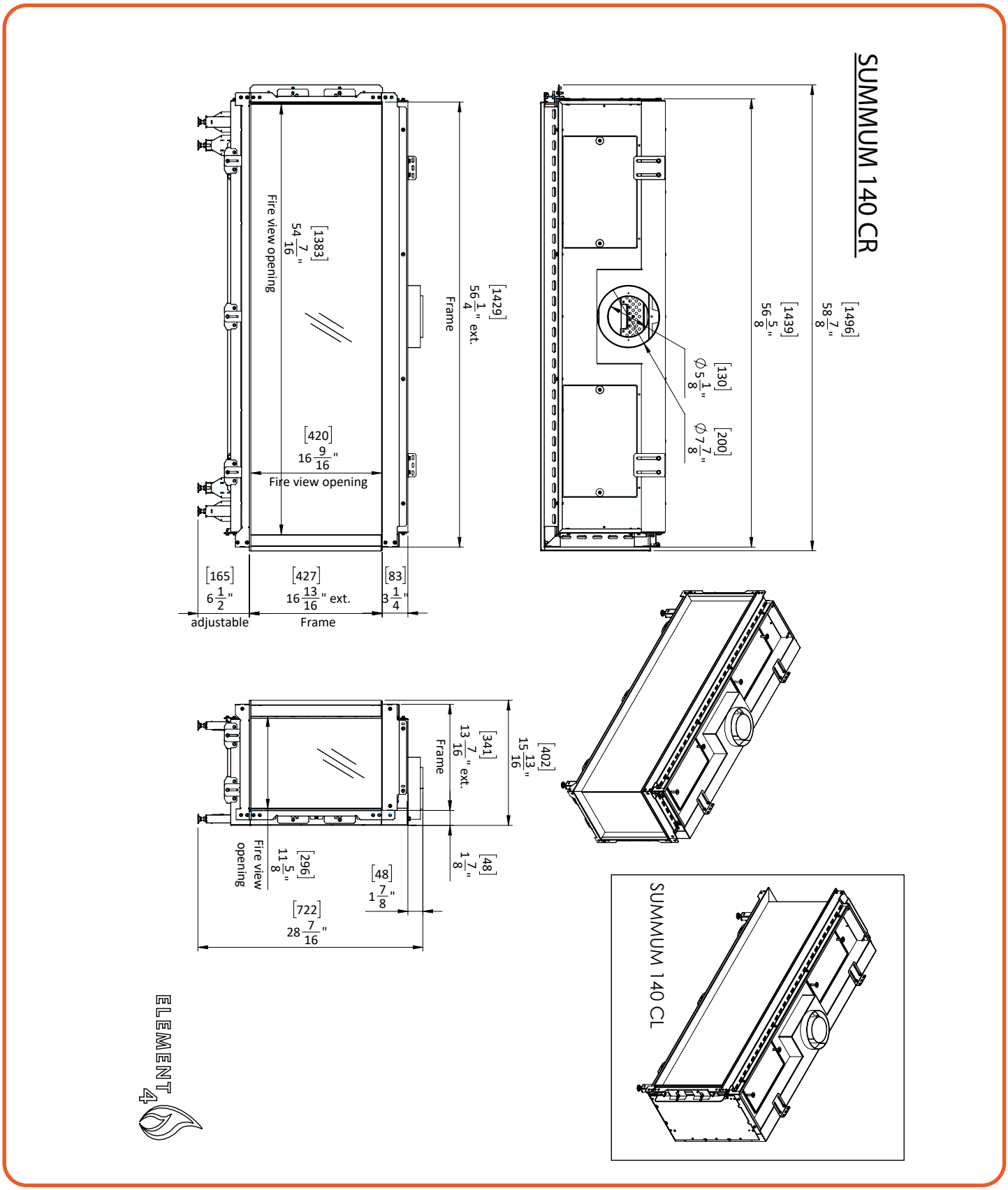

Figure D.B - Technical drawing of Summum 140 C

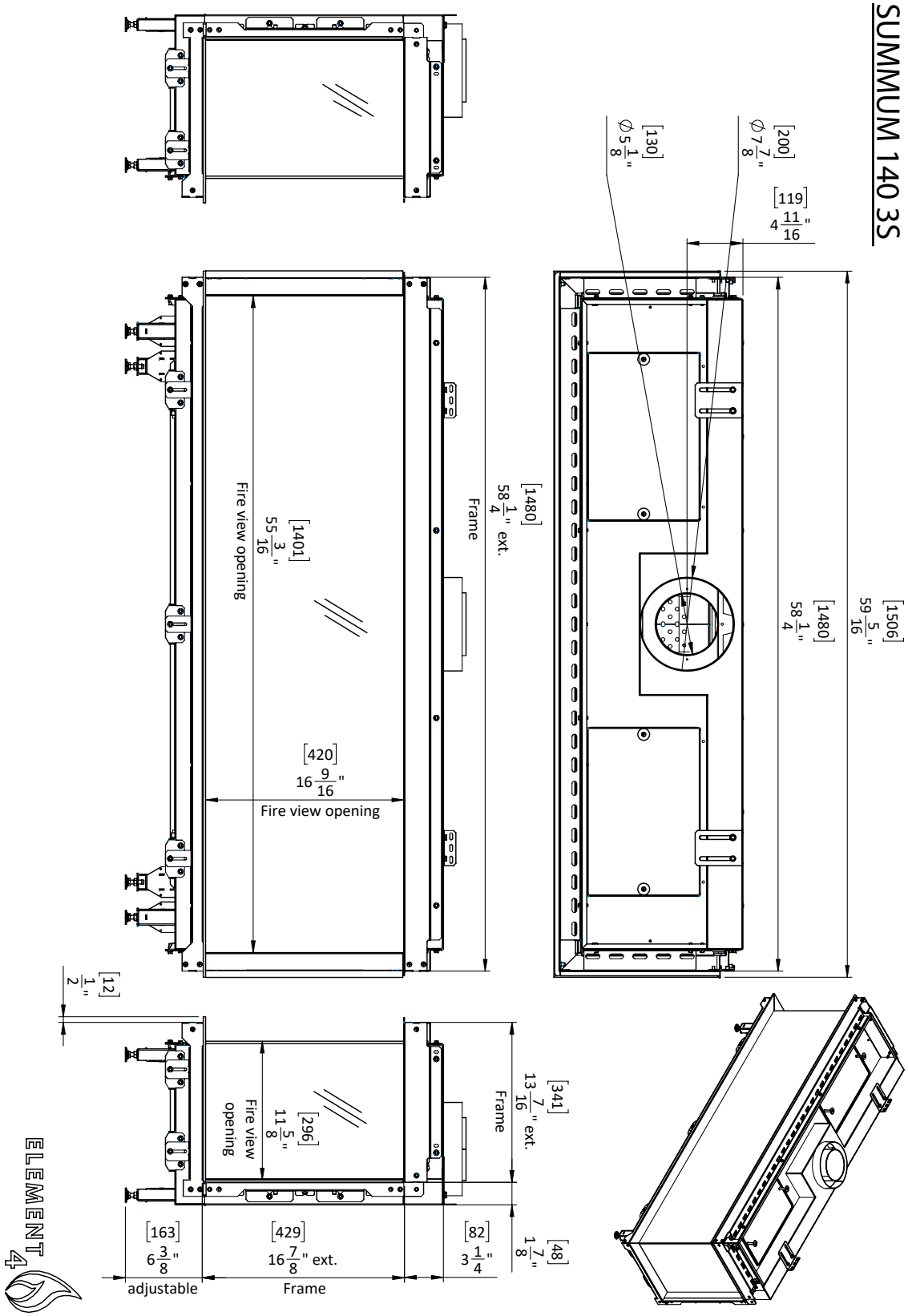

Figure D.C - Technical drawing of Summum 140 3S

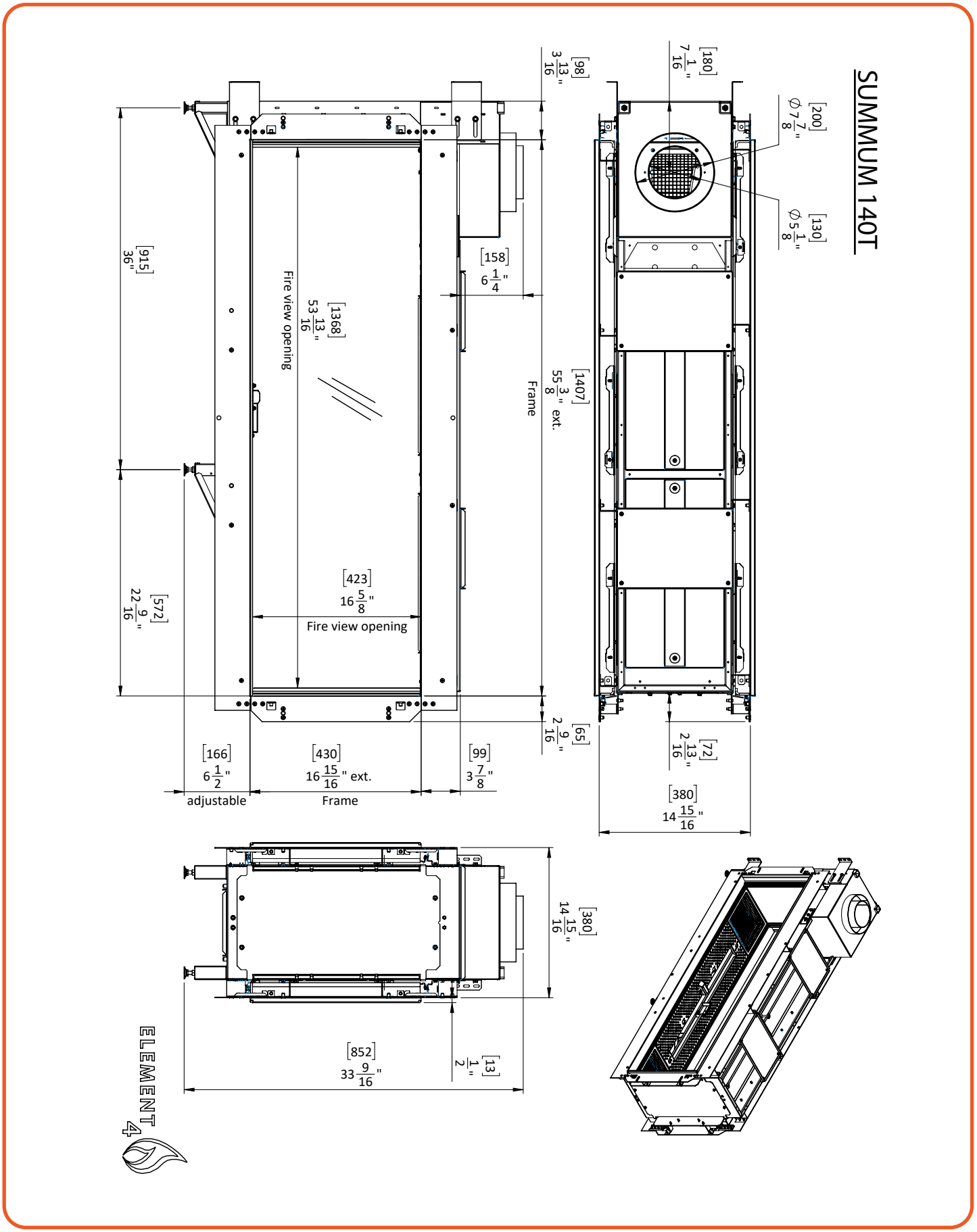

Figure D.D - Technical drawing of Summum 140 T

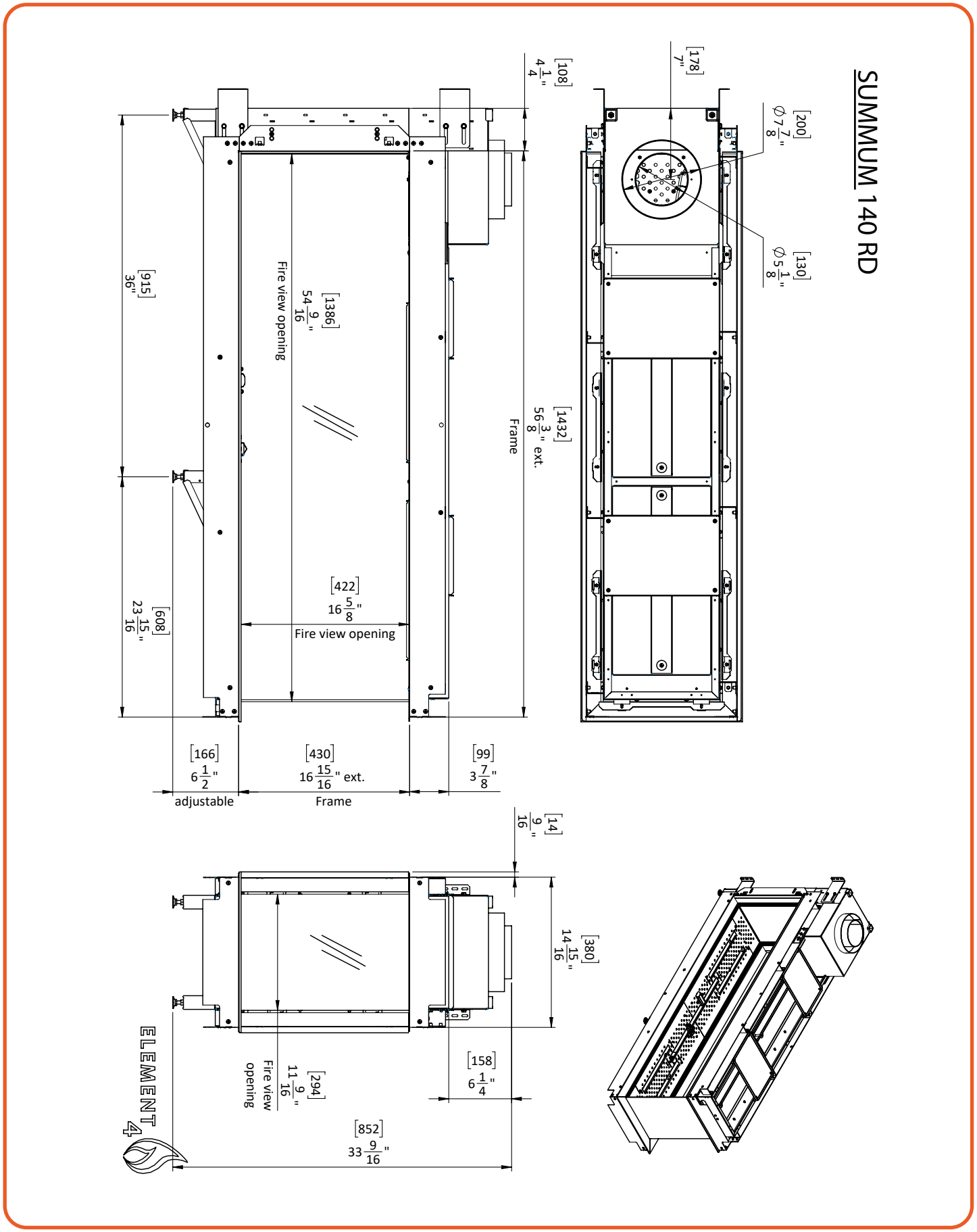

Figure D.E - Technical drawing of Summum 140 RD

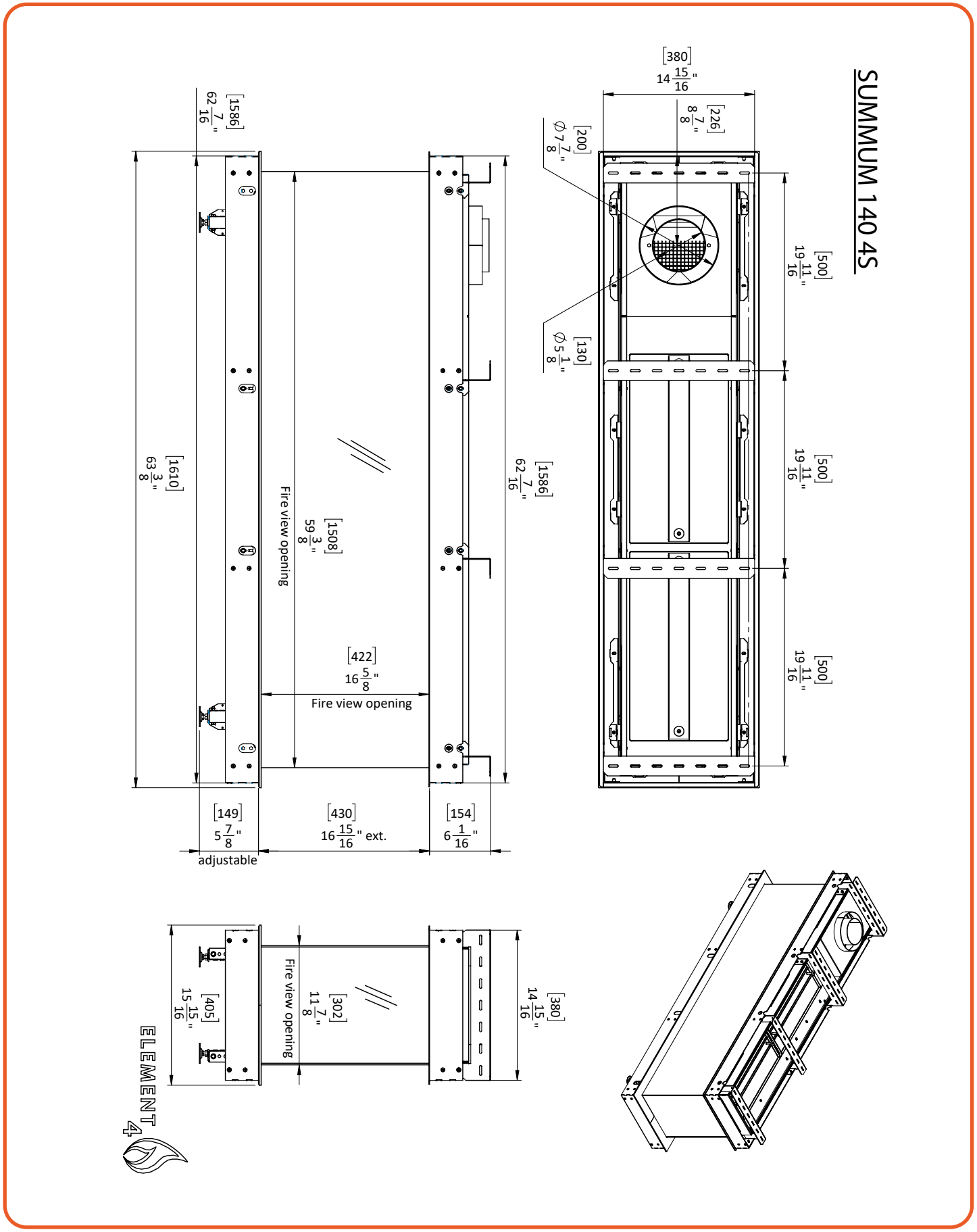

Figure D.F - Technical drawing of Summum 140 4S

E ELEMENT4 WARRANTY

Element4 Gas Fireplace

Element4 warrants these gas fireplaces against defects in materials and workmanship for a period of TWO (2) YEARS from the date of original retail purchase. Glass is expressly NOT covered by this warranty.

If a defect exists, Element4 will, at its option, either (1) provide needed components using new or refurbished replacement parts or (2) exchange the product with one which is new or which has been manufactured from new or serviceable used parts and is at least functionally equivalent to the original product. A replacement product/part assumes the remaining warranty of the original product or ninety (90) days from the date of replacement or repair, whichever provides longer coverage for you.

When a product or part is exchanged, any replacement item becomes your property and the replaced item becomes the property of Element4. All warranty claims must be submitted through the dealer from which you purchased the product. Check with your dealer in advance for any costs to you when arranging a warranty call. Shipping and/or delivery charges for parts are not covered by this warranty.
Nothing in the above shall be deemed to imply that this warranty shall apply to work which has been abused or neglected or shows evidence of changes or modifications by others with or without permit, damages caused by the acts of God, building settlement or moving, fire or vandalism. In addition, installation of this product that varies from the requirements stated in the instruction manual will void the warranty.

>8

PRODUCT INSTALLATION RECORD

Installer: Please complete this form.
Customer: Please retain this information.

Model (Check one)	☐ Summum 140 F ☐ Summum 140 CL ☐ Summum 140 CR ☐ Summum 140 3S ☐ Summum 140 T ☐ Summum 140 RD ☐ Summum 140 4S
Purchased from	
Installed by	
Date of installation	
Fireplace serial number	
Fuel Type	☐ Natural Gas ☐ LPG
Total horizontal section (venting)	
Total vertical section (venting)	

Manufactured by:

ELEMENT4 B.V.

Simon Stevinweg 6A
8013 NB Zwolle
The Netherlands
info@element4.nl
www.element4fires.com

RELEASE DATE | 13/05/26